Maintenance and Service Guide

SUMMARY

This guide provides information about spare parts, removal and replacement of parts, security, backing up, and more.

Legal information

© Copyright 2022 HP Development Company, L.P.

AMD is a trademark of Advanced Micro Devices, Inc. Bluetooth is a trademark owned by its proprietor and used by HP Inc. under license. Chrome and Google are trademarks of Google LLC. Intel, Core, Thunderbolt, and vPro are trademarks of Intel Corporation or its subsidiaries in the U.S. and/or other countries. USB Type-C and USB-C are registered trademarks of USB Implementers Forum. DisplayPort™ and the DisplayPort™ logo are trademarks owned by the Video Electronics Standards Association (VESA®) in the United States and other countries. Wi-Fi is a registered trademark of the Wi-Fi Alliance®.

The information contained herein is subject to change without notice. The only warranties for HP products and services are set forth in the express warranty statements accompanying such products and services. Nothing herein should be construed as constituting an additional warranty. HP shall not be liable for technical or editorial errors or omissions contained herein.

First Edition: May 2022

Document Part Number: N09567-001

Product notice

This guide describes features that are common to most models. Some features may not be available on your computer.

Not all features are available in all editions or versions of Windows. Systems may require upgraded and/or separately purchased hardware, drivers, software or BIOS update to take full advantage of Windows functionality. Windows is automatically updated, which is always enabled. High-speed internet and Microsoft account required. ISP fees may apply and additional requirements may apply over time for updates. See http://www.microsoft.com. **If your product ships with Windows in S Mode:** Windows in S Mode works exclusively with apps from the Microsoft Store within Windows. Certain default settings, features, and apps cannot be changed. Some accessories and apps that are compatible with Windows may not work (including some antivirus, PDF writers, driver utilities, and accessibility apps), and performance may vary, even if you switch out of S Mode. If you switch to Windows, you cannot switch back to S Mode. Learn more at Windows.com/SmodeFAQ.

To access the latest user guides, go to http://www.hp.com/support, and follow the instructions to find your product. Then select **Manuals**.

Software terms

By installing, copying, downloading, or otherwise using any software product preinstalled on this computer, you agree to be bound by the terms of the HP End User License Agreement (EULA). If you do not accept these license terms, your sole remedy is to return the entire unused product (hardware and software) within 14 days for a full refund subject to the refund policy of your seller.

For any further information or to request a full refund of the price of the computer, please contact your seller.

Table of contents

1 Product description 1

2 Components 6

Locating hardware 6

Locating software 6

Right 6

Left 7

Display 8

Low blue light mode (select products only) 8

Keyboard area 10

Touchpad 10

Touchpad settings 10

Adjusting touchpad settings 10

Turning on the touchpad 10

Touchpad components 10

Lights 11

Button and fingerprint reader 12

Special keys 14

Bottom 15

Rear 16

Labels 16

3 Illustrated parts catalog 18

Computer major components 18

Display assembly subcomponents 26

Mass storage devices 28

Cables 29

Miscellaneous parts 29

4 Removal and replacement procedures preliminary requirements 36

Tools required 36

Service considerations 36

Plastic parts 36

Cables and connectors 36

Drive handling 36
Electrostatic discharge information 37
Generating static electricity 37
Preventing electrostatic damage to equipment 38
Personal grounding methods and equipment 38
Grounding the work area 39
Recommended materials and equipment 39
Cleaning your computer 40
Enabling HP Easy Clean (select products only) 40
Removing dirt and debris from your computer 40
Cleaning your computer with a disinfectant 41
Caring for wood veneer (select products only) 42
Packaging and transporting guidelines 42
Accessing support information 43
5 Removal and replacement procedures for authorized service provider parts 45
Component replacement procedures 45
Preparation for disassembly 45
Bottom cover 45
Battery 47
WWAN module 49
WLAN module 50
Speakers 52
Memory modules 53
Solid-state drive 55
Audio jack 57
Connector board cable 58
Connector board 59
Fan 60
Display assembly 61
System board 73
Heat sink 77
Fingerprint reader 78
Fingerprint reader cable 80
RTC battery 80
NFC module cable 81
NFC module 82
Touchpad cable 83
Touchpad 84
Card reader cable 85
Card reader 86
Keyboard with top cover 87
6 Using Setup Utility (BIOS) 89
Starting Setup Utility (BIOS) 89
Updating Setup Utility (BIOS) 89
Determining the BIOS version 89
Preparing for a BIOS update 90

Downloading a BIOS update 90
Installing a BIOS update 91

7 Computer Setup (BIOS), TPM, and HP Sure Start 92

Using Computer Setup 92
Navigating and selecting in Computer Setup 92
Restoring factory settings in Computer Setup 93
Updating the BIOS 93
Determining the BIOS version 93
Preparing for a BIOS update 93
Downloading a BIOS update 94
Installing a BIOS update 94
Changing the boot order using the f9 prompt 94

TPM BIOS settings (select products only) 95

Using HP Sure Start (select products only) 95

8 Backing up, restoring, and recovering 96

Backing up information and creating recovery media 96
Using Windows tools for backing up 96
Using the HP Cloud Recovery Download Tool to create recovery media (select products only) 96

Restoring and recovering your system 97
Creating a system restore 97
Restoring and recovery methods 97
Recovering using HP Recovery media 97
Changing the computer boot order 98
Using HP Sure Recover (select products only) 98

9 Using HP PC Hardware Diagnostics 99

Using HP PC Hardware Diagnostics Windows (select products only) 99
Using an HP PC Hardware Diagnostics Windows hardware failure ID code 99
Accessing HP PC Hardware Diagnostics Windows 99
Accessing HP PC Hardware Diagnostics Windows from HP Help and Support (select products only) 100
Accessing HP PC Hardware Diagnostics Windows from Support Assistant 100
Accessing HP PC Hardware Diagnostics Windows from the Start menu (select products only) 100
Downloading HP PC Hardware Diagnostics Windows 100
Downloading the latest HP PC Hardware Diagnostics Windows version from HP 100
Downloading the HP PC Hardware Diagnostics Windows from the Microsoft Store 101
Downloading HP Hardware Diagnostics Windows by product name or number (select products only) 101
Installing HP PC Hardware Diagnostics Windows 101

Using HP PC Hardware Diagnostics UEFI 101
Using an HP PC Hardware Diagnostics UEFI hardware failure ID code 102
Starting HP PC Hardware Diagnostics UEFI 102
Downloading HP PC Hardware Diagnostics UEFI to a USB flash drive 102
Downloading the latest HP PC Hardware Diagnostics UEFI version 103
Downloading HP PC Hardware Diagnostics UEFI by product name or number (select products only) 103

Using Remote HP PC Hardware Diagnostics UEFI settings (select products only) 103
Downloading Remote HP PC Hardware Diagnostics UEFI 103
Downloading the latest Remote HP PC Hardware Diagnostics UEFI version 103
Downloading Remote HP PC Hardware Diagnostics UEFI by product name or number 103
Customizing Remote HP PC Hardware Diagnostics UEFI settings 104

10 Specifications 105
Computer specifications 105
35.6 cm (14.0 in) display specifications 106
Solid-state drive specifications 106
Solid-state drive specifications (SATA-3) 107

11 Statement of memory volatility 108
Current BIOS steps 108
Nonvolatile memory usage 110
Questions and answers 112
Using HP Sure Start (select products only) 114

12 Power cord set requirements 115
Requirements for all countries 115
Requirements for specific countries and regions 115

13 Recycling 118

Index 119

1 Product description

This table provides detailed product information.

Table 1-1 Product components and their descriptions

Category	Description
Product Name	HP EliteBook 840 14 inch G9 Notebook PC
Processors	Intel™ Core® i7-1280P 1.8 GHz (turbo up to 4.8 GHz) processor (14 cores, 24 MB Intel Smart Cache, 28 W)
	Intel Core i7-1270P 1.6 GHz (turbo up to 4.8 GHz) processor (12 cores, 18 MB Intel Smart Cache, 28 W)
	Intel Core i7-1265U 1.8 GHz (turbo up to 4.8 GHz) processor (10 cores, 12 MB Intel Smart Cache, 15 W)
	Intel Core i7-1260U 2.2 GHz (turbo up to 4.7 GHz) processor (12 cores, 18 MB Intel Smart Cache, 28 W)
	Intel Core i7-1255U 1.7 GHz (turbo up to 4.7 GHz) processor (10 cores, 12 MB Intel Smart Cache, 15 W)
	Intel Core i5-1250P 1.7 GHz (turbo up to 4.4 GHz) processor (12 cores, 18 MB Intel Smart Cache, 28 W)
	Intel Core i5-1245U 1.6 GHz (turbo up to 4.4 GHz) processor (10 cores, 12 MB Intel Smart Cache, 15 W)
	Intel Core i5-1240P 1.7 GHz (turbo up to 4.4 GHz) processor (12 cores, 12 MB Intel Smart Cache, 28 W)
	Intel Core i5-1235U 1.3 GHz (turbo up to 4.4 GHz) processor (10 cores, 12 MB Intel Smart Cache, 15 W)
Chipset	Intel integrated solder-on-circuit (SoC)
Display	**35.6 cm (14.0 in), liquid crystal display (LCD) widescreen ultra extended graphics array (WUXGA, 1920 × 1200), antiglare, ultrawide viewing angle (UWVA), bent display panel**
	White light-emitting diode + low blue light (WLED + LBL), 100% sRGB, embedded DisplayPort™ + panel self refresh (eDP + PSR), LP, ambient light sensor + adaptive color sensor (ALS + ACS), SureView Reflect, non-touch on panel (TOP) display panel with 5 MP infrared time-of-flight (ToF) camera; typical brightness: 1000 nits
	WLED + LBL, 100% sRGB, eDP 1.3 + PSR, NB2Y, non-TOP display panel with 5 MP infrared ToF camera and generation 4+ privacy filter; typical brightness: 1000 nits
	WLED + LBL, 100% sRGB, eDP + PSR, LP, advanced light source + ACS (ALS + ACS), non-TOP display panel with 5 MP infrared ToF camera; typical brightness: 400 nits
	Light-emitting diode (LED), 45% CG, eDP 1.2 with PSR, LP, NB2X, TOP display panel with 5 MP infrared ToF camera; typical brightness: 250 nits
	LED, 45% CG, eDP 1.2 with PSR, LP, NB2X, non-TOP display panel with 5 MP infrared ToF camera; typical brightness: 250 nits
	LED, 45% CG, eDP 1.2 with PSR, LP, NB2X, TOP display panel with 5 MP infrared ToF camera; typical brightness: 250 nits
	LED, 45% CG, eDP 1.2 with PSR, LP, NB2X, non-TOP display panel with 5 MP infrared ToF camera; typical brightness: 250 nits

Table 1-1 Product components and their descriptions (continued)

Category	Description
Memory	Two customer-accessible memory module slots (small outline dual in-line memory modules (SODIMMs) supporting up to 64 GB of RAM in the following configurations: • 64 GB (32 × 2) • 48 GB (32 + 16) • 32 GB (32 × 1) • 32 GB (16 × 2) • 24 GB (16 + 8) • 16 GB (16 × 1) • 16 GB (8 × 2) • 8 GB (8 × 1)
	Double data rate (DDR5)-4800, Non Error-Correcting Code (NECC) support
eMMC	On-board embedded MultiMedia Controller (eMMC v5.0) 32 GB
Primary storage	**On-board embedded MultiMedia Controller (eMMC v5.0)**
	Support for the following configurations: • 2 TB, 2280, Peripheral Component Interconnect Express (PCIe)-4×4, Non-Volatile Memory Express (NVMe) solid-state drive with three-layer cell (TLC) • 1 TB, 2280, PCIe-4×4, NVMe solid-state drive with TLC • 512 GB, PCIe-4×4, NVMe solid-state drive with TLC • 512 GB, 2280, PCIe-4×4, NVMe, value solid-state drive • 512 GB, 2280, PCIe-4×4, NVMe, self-encrypted (SED), OPAL2 solid-state drive with TLC • 256 GB, PCIe-4×4, NVMe, Secure Seal (SS) solid-state drive with TLC • 256 GB, 2280, PCIe-4×4, NVMe, value solid-state drive • 256 GB, 2280, PCIe-4×4, NVMe, SED, OPAL2, solid-state drive with TLC
	720p by 30 frames per second
	Dual-array digital microphone with appropriate software: beam forming, echo cancellation, noise suppression
	HP Wide Vision HD Camera: 5 MP, indicator LED, USB 2.0, HD, Time-of-Flight (ToF), near field-of-view (NFOV), fixed, infrared (IR), integrated camera
Audio and video	**Audio brand:** BANG and OLUFSEN
	Support for dual speakers
	HP Wide Vision HD Camera: 5 MP, indicator LED, USB 2.0, HD, Time-of-Flight (ToF), near field-of-view (NFOV), fixed, infrared (IR), integrated camera
	720p by 30 frames per second
	Dual-array digital microphone with appropriate software: beam forming, echo cancellation, noise suppression

Table 1-1 Product components and their descriptions (continued)

Category	Description
Wireless	**Wireless Local Area Network (WLAN) module**
	Intel AX211 Wi-Fi® 6e + Bluetooth® 5.2 M.2 2230 160 MHz CNVi worldwide (WW) WLAN module
	Intel AX211 Wi-Fi 6E + Bluetooth 5.2 M.2 2230 vPro® 160 MHz CNVi WW WLAN module
	Near field communication (NFC) Mirage WNC XRAV-1
	Wireless Wide Area Network (WWAN) module
	Intel 5000 5G WWAN module
	Intel XMM 7560 R+ long-term evolution (LTE)-Advanced Pro (Cat 16) WWAN module
	WWAN module service providers: ATT and Verizon
Ports	Hot plug/unplug and autodetect for correct output to wide-aspect vs. standard aspect video
	• Audio-out (headphone)/Audio-in (microphone) combo jack • HDMI port • SIM card slot (select products only) • Smart card reader (select products only) • USB SuperSpeed 5 Gbps port • USB SuperSpeed 5 Gbps port with HP Sleep and Charge • USB Type-C® power connector and SuperSpeed port with HP Sleep and Charge and DisplayPort output • USB Type-C power connector and Thunderbolt™ port with HP Sleep and Charge and DisplayPort output (select products only)
Keyboard/pointing devices	**Keyboard:** Backlit, spill-resistant, premium notebook PC keyboard with Clickpad and privacy features
	Touchpad
	Clickpad with image sensor
	Multitouch gestures enabled
	Precision touchpad support
	Support for Modern Trackpad Gestures
	Taps enabled as default

Table 1-1 Product components and their descriptions (continued)

Category	Description
Power requirements	**Battery**
	3 cell, 38 Whr, polymer, HP Long Life
	HP Fast Charge Technology
	Smart AC adapter:
	65 W, non-Power Factor Correction (nPFC), standard USB Type-C® straight barrel, 1.8m (6.0 ft)
	65 W, nPFC, slim USB Type-C straight barrel, 1.8m (6.0 ft)
	45 W, nPFC, standard USB Type-C straight barrel, 1.8m (6.0 ft)
	Power cord:
	C5, 1.0 m (3.3 ft), conventional, high frequency (HF), with straight connector and sticker
	C5, 1.0 m (3.3 ft), conventional with sticker
	C5, 1.0 m (3.3 ft), premium with sticker
Security	Active SmartCard
	Integrated fingerprint reader
	Privacy camera shutter door
Sensors	Adaptive color sensor (ACS)
	Ambient light sensor (ALS)
	Hall sensor (integrated)
	HP Sure Platform
	Motion AI
	Thermal sensor
	Time of Flight (ToF)

Table 1-1 Product components and their descriptions (continued)

Category	Description
Operating system	Windows® 10 Enterprise 64
	Windows 10 Enterprise 64 LTSC 2109 (21H2)
	Windows 10 Pro 64 SAC 2009 (20H2)
	Windows 10 Pro 64 SAC 2104 (21H1)
	Windows 11 Home 64
	Windows 11 Home 64 Advanced
	Windows 11 Home 64 Advanced Single Language
	Windows 11 Home 64 Chinese Market CPPP
	Windows 11 Home 64 High-end Chinese Market CPPP
	Windows 11 Home 64 Plus
	Windows 11 Home 64 Plus Single Language
	Windows 11 Home 64 Plus Single Language Africa Market PPP
	Windows 11 Home 64 Plus Single Language APAC EM PPP
	Windows 11 Home 64 Plus Single Language India Market PPP
	Windows 11 Home 64 Plus Single Language Indonesia Market PPP
	Windows 11 Home 64 Single Language
	Windows 11 Home 64 Single Language Africa Market PPP
	Windows 11 Home 64 Single Language APAC EM PPP
	Windows 11 Home 64 Single Language India Market PPP
	Windows 11 Home 64 Single Language Indonesia Market PPP
	Windows 11 Pro 64
	Windows 11 Pro 64 Chinese Market
	Windows 11 Pro 64 Downgrade Windows 10 Pro 64
	Windows 11 Pro 64 Downgrade Windows 10 Pro 64 Chinese Market
	Windows 11 Pro 64 Downgrade Windows 10 Pro 64 StF MSNA Standard
	Windows 11 Pro 64 StF MSNA Standard
	FreeDOS
Serviceability	**End user replaceable part:** AC adapter

2 Components

Your computer features top-rated components. This chapter provides details about your components, where they are located, and how they work.

Locating hardware

Use these instructions to find out what hardware is installed on your computer.

- Select the **Search** icon (select products only) in the taskbar, type `device manager` in the search box, and then select the **Device Manager** app.

A list displays all the devices installed on your computer.

For information about system hardware components and the system BIOS version number, press fn+esc (select products only).

Locating software

Use these instructions to find out what software is installed on your computer:

- Right-click the **Start** button, and then select **Apps and Features**.

Right

Use the illustration and table to identify the components on the right side of the computer.

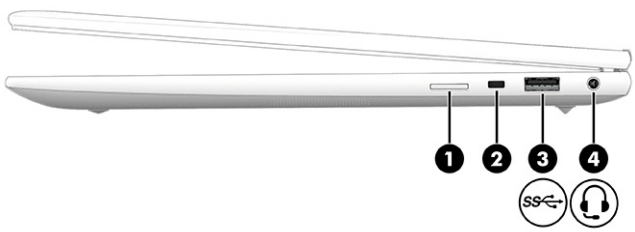

Table 2-1 **Right-side components and their descriptions**

Component		Description
(1)	SIM card slot (select products only)	Supports a wireless subscriber identity module (SIM) card.

Table 2-1 Right-side components and their descriptions (continued)

Component			Description
(2)		Security cable slot	Attaches an optional security cable to the computer. NOTE: The security cable is designed to act as a deterrent, but it might not prevent the computer from being mishandled or stolen.
(3)	SS	USB SuperSpeed 5 Gbps port	Connects a USB device, provides high-speed data transfer, and (for select products) charges small devices (such as a smartphone) when the computer is on or in Sleep mode. NOTE: Use a standard USB Type-A charging cable or cable adapter (purchased separately) when charging a small external device.
(4)		Audio-out (headphone)/Audio-in (microphone) combo jack	Connects optional powered stereo speakers, headphones, earbuds, a headset, or a television audio cable. Also connects an optional headset microphone. This jack does not support optional standalone microphones. WARNING! To reduce the risk of personal injury, adjust the volume before putting on headphones, earbuds, or a headset. For additional safety information, see the *Regulatory, Safety, and Environmental Notices*. To access this guide: ■ Select the **Search** icon (select products only) in the taskbar, type `HP Documentation` in the search box, and then select **HP Documentation**. NOTE: When a device is connected to the jack, the computer speakers are disabled.

Left

Use the illustration and table to identify the components on the left side of the computer.

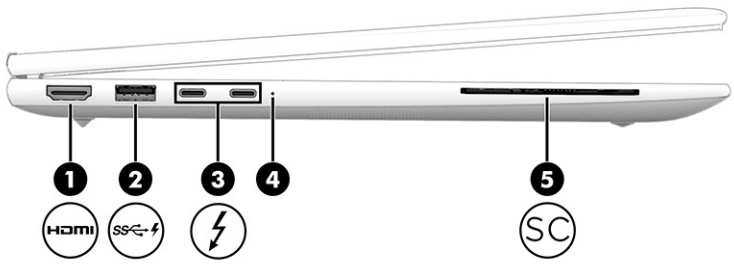

Table 2-2 Left-side components and their descriptions

Component			Description
(1)	HDMI	HDMI port	Connects an optional video or audio device, such as a high-definition television, any compatible digital or audio component, or a high-speed High Definition Multimedia Interface (HDMI) device.

Table 2-2 Left-side components and their descriptions (continued)

Component			Description
(2)	SS	USB SuperSpeed 5 Gbps port with HP Sleep and Charge	Connects a USB device, provides high-speed data transfer, and charges small devices (such as a smartphone), even when the computer is off. NOTE: Use a standard USB Type-A charging cable or cable adapter (purchased separately) when charging a small external device.
(3)		USB Type-C® power connector and Thunderbolt™ ports with HP Sleep and Charge and DisplayPort™ output (2)	Connect AC adapters that have a USB Type-C connector, supplying power to the computer and, if needed, charging the computer battery. – and – Connect USB devices, provide high-speed data transfer, and charge small devices (such as a smartphone), even when the computer is off. NOTE: Use a standard USB Type-C charging cable or cable adapter (purchased separately) when charging a small external device. – and – Connect display devices that have a USB Type-C connector, providing DisplayPort output. NOTE: Your computer might also support a Thunderbolt docking station.
(4)		Battery light	When AC power is connected: • White: The battery charge is greater than 90 percent. • Amber: The battery charge is from 0 to 90 percent. • Off: The battery is not charging. When AC power is disconnected (battery not charging): • Blinking amber: The battery has reached a low battery level. When the battery has reached a critical battery level, the battery light begins blinking rapidly. • Off: The battery is not charging.
(5)	SC	Smart card reader (select products only)	Supports optional smart cards.

Display

Use the illustration and table to identify the display components.

Low blue light mode (select products only)

Your computer display is shipped from the factory in low blue light mode for improved eye comfort and safety. Also, blue light mode automatically adjusts blue light emissions when you are using the computer at night or for reading.

⚠ **WARNING!** To reduce the risk of serious injury, read the *Safety & Comfort Guide*. It describes proper workstation setup and proper posture, health, and work habits for computer users. The *Safety & Comfort Guide* also provides important electrical and mechanical safety information. The *Safety & Comfort Guide* is available on the web at http://www.hp.com/ergo.

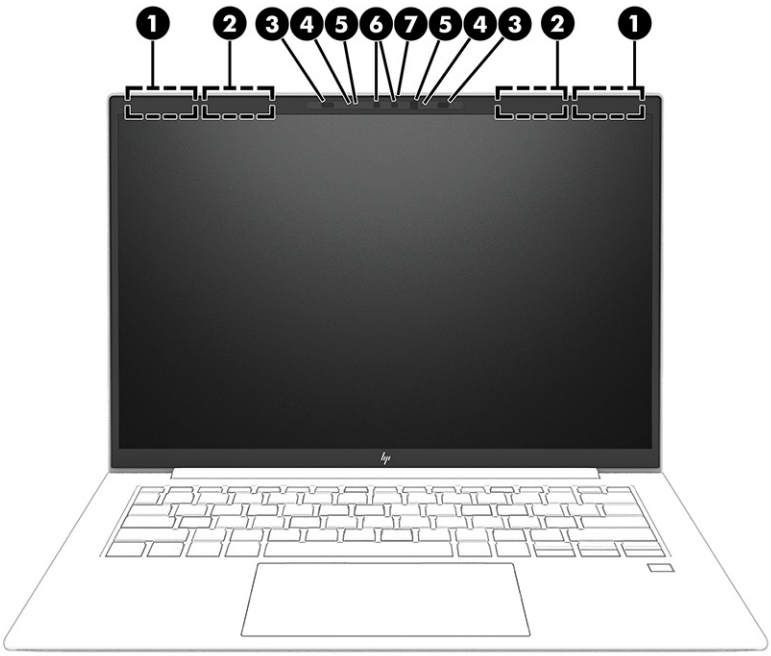

Table 2-3 **Display components and their descriptions**

Component		Description
(1)	WLAN antennas*	Send and receive wireless signals to communicate with WLANs.
(2)	WWAN antennas* (select products only)	Send and receive wireless signals to communicate with WWANs.
(3)	Ambient light and color sensors (2)	Adjusts the brightness of the display, depending on the ambient light, and manages and controls the color temperature. Color temperature enables you to measure and adjust the warmth or coolness of the light source.
(4)	Internal microphones (2)	Record sound.
(5)	Camera light(s) (select products only)	On: One or more cameras are in use.
(6)	Camera(s) (select products only)	Allow(s) you to video chat, record video, and record still images. Some cameras also allow a facial recognition logon to Windows, instead of a password logon. **NOTE:** Camera functions vary depending on the camera hardware and software installed on your product.
(7)	Camera privacy cover (select products only)	By default, the camera lens is uncovered, but you can slide the camera privacy cover to block the camera's view. To use the camera, slide the camera privacy cover in the opposite direction to reveal the lens. **NOTE:** If you have both front-facing and rear-facing cameras, when one camera lens is revealed and ready to use, the other is concealed.

Table 2-3 Display components and their descriptions (continued)

Component	Description
	*The antennas are not visible from the outside of the computer. For optimal transmission, keep the areas immediately around the antennas free from obstructions. For wireless regulatory notices, see the section of the *Regulatory, Safety, and Environmental Notices* that applies to your country or region. To access this guide: ▪ Select the **Search** icon (select products only) in the taskbar, type `HP Documentation` in the search box, and then select **HP Documentation**.

Keyboard area

Keyboards can vary by language.

NOTE: The keyboard, including the function keys and power button (select products only), is disabled in stand, tent, and tablet modes. To enable the keyboard, including the power button, change to the clamshell mode.

Touchpad

The touchpad settings and components are described here.

Touchpad settings

You learn how to adjust the touchpad settings and components here.

Adjusting touchpad settings

Use these steps to adjust touchpad settings and gestures.

1. Select the **Search** icon (select products only) in the taskbar, type `touchpad settings` in the search box, and then press enter.
2. Choose a setting.

Turning on the touchpad

Follow these steps to turn on the touchpad.

1. Select the **Search** icon (select products only) in the taskbar, type `touchpad settings` in the search box, and then press enter.
2. Using an external mouse, click the **Touchpad** button.

   If you are not using an external mouse, press the Tab key repeatedly until the pointer rests on the **touchpad** button. Then press the spacebar to select the button.

Touchpad components

Use the illustration and table to identify the touchpad components.

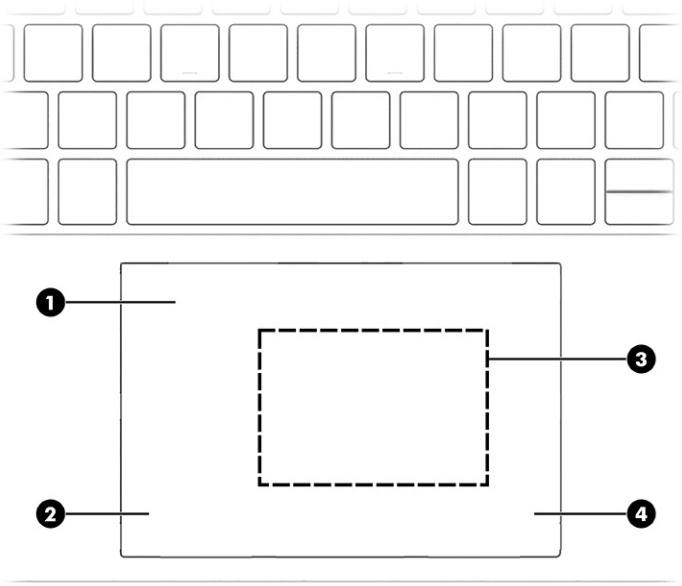

Table 2-4 **Touchpad components and their descriptions**

Component		Description
(1)	Touchpad zone	Reads your finger gestures to move the pointer or activate items on the screen.
(2)	Left touchpad button	Functions like the left button on an external mouse.
(3)	Near Field Communications (NFC) tapping area and antenna (select products only)*	Allows you to wirelessly share information when you tap it with an NFC-enabled device.
(4)	Right touchpad button	Functions like the right button on an external mouse.

*The antennas are not visible from the outside of the computer. For optimal transmission, keep the areas immediately around the antennas free from obstructions.

For wireless regulatory notices, see the section of the *Regulatory, Safety, and Environmental Notices* that applies to your country or region.

To access this guide:

- Select the **Search** icon (select products only) in the taskbar, type `HP Documentation` in the search box, and then select **HP Documentation**.

Lights

Use the illustration and table to identify the lights on the computer.

NOTE: Refer to the illustration that most closely matches your computer.

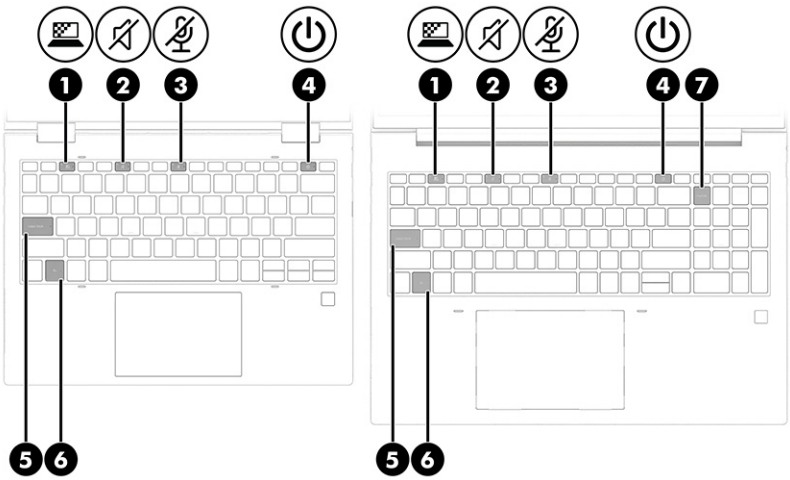

Table 2-5 Lights and their descriptions

Component			Description
(1)		Privacy key light (select products only)	On: Privacy screen is on, which helps prevent side-angle viewing.
(2)		Mute light	• On: Computer sound is off. • Off: Computer sound is on.
(3)		Microphone mute light	• On: Microphone is off. • Off: Microphone is on.
(4)		Power light	• On: The computer is on. • Blinking (select products only): The computer is in the Sleep state, a power-saving state. The computer shuts off power to the display and other unnecessary components. • Off: Depending on your computer model, the computer is off, in Hibernation, or in Sleep. Hibernation is the power-saving state that uses the least amount of power.
(5)		Caps lock light	On: Caps lock is on, which switches the key input to all capital letters.
(6)		Fn lock light	On: The fn key is locked.
(7)	numlk	Num lk light	On: Num lk is on.

Button and fingerprint reader

Fingerprint readers can be located on the touchpad, on a side panel of the computer, or on the top cover below the keyboard.

IMPORTANT: To verify that your computer supports fingerprint reader sign-in, select the **Search** icon (select products only) in the taskbar, type `Sign-in options` in the search box, and then follow the

on-screen instructions. If **Fingerprint reader** is not listed as an option, then your notebook does not include a fingerprint reader.

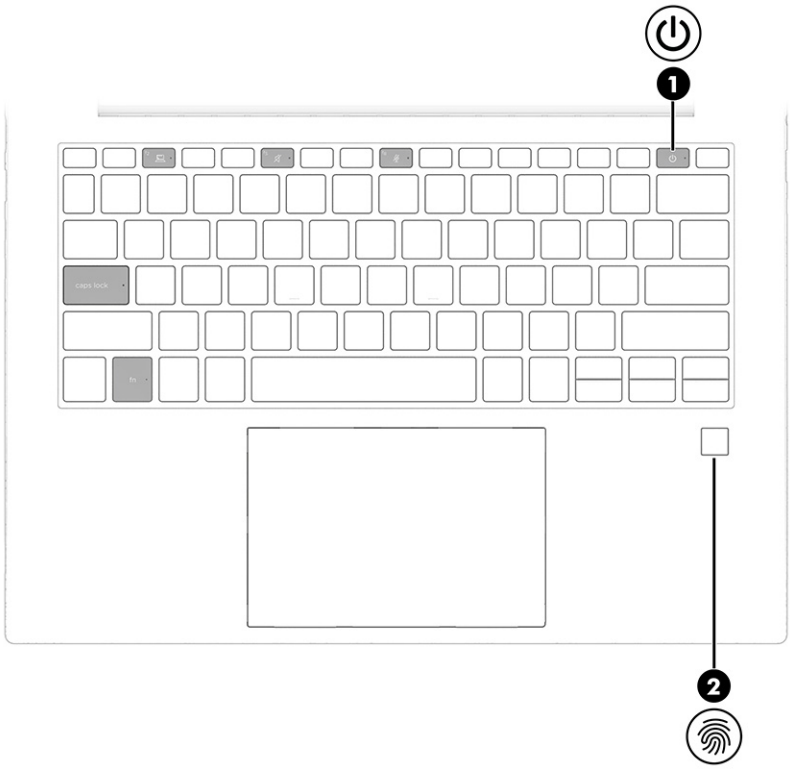

Table 2-6 **Button and fingerprint reader and their descriptions**

Component		Description
(1)	Power button	• When the computer is off, press the button briefly to turn on the computer. • When the computer is on, press the button briefly to initiate Sleep. • When the computer is in the Sleep state, press the button briefly to exit Sleep (select products only). • When the computer is in Hibernation, press the button briefly to exit Hibernation. IMPORTANT: Pressing and holding down the power button results in the loss of unsaved information. If the computer has stopped responding and shutdown procedures are ineffective, press and hold the power button for at least 4 seconds to turn off the computer. To learn more about your power settings, use the Power icon. • Right-click the **Power** icon and then, depending on your product, select **Power and sleep settings** or **Power Options**.

Table 2-6 Button and fingerprint reader and their descriptions (continued)

Component			Description
(2)		Fingerprint reader (select products only)	Allows a fingerprint logon to Windows, instead of a password logon. ■ Touch your finger to the fingerprint reader. IMPORTANT: To prevent fingerprint logon issues, make sure when you register your fingerprint that all sides of your finger are registered by the fingerprint reader.

Special keys

Use the illustration and table to identify the special keys.

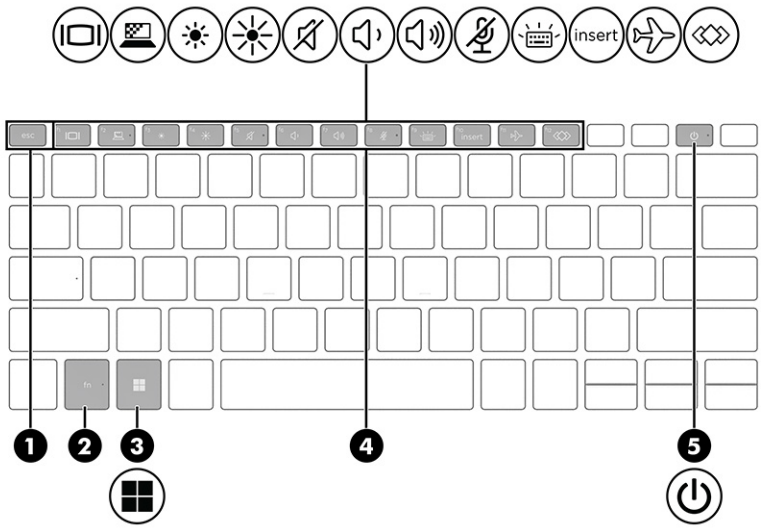

Table 2-7 Special keys and their descriptions

Component		Description
(1)	Action keys	Execute frequently used system functions.
(2)	esc key	Displays system information when pressed in combination with the fn key.
(3)	fn key	Executes frequently used system functions when pressed in combination with another key. Such key combinations are called *hot keys*.
(4)	Windows key	Opens the Start menu. NOTE: Pressing the Windows key again will close the Start menu.

Table 2-7 Special keys and their descriptions (continued)

Component		Description
(5)	Power button	• When the computer is off, press the button briefly to turn on the computer. • When the computer is on, press the button briefly to initiate Sleep. • When the computer is in the Sleep state, press the button briefly to exit Sleep (select products only). • When the computer is in Hibernation, press the button briefly to exit Hibernation. IMPORTANT: Pressing and holding down the power button results in the loss of unsaved information. If the computer has stopped responding and shutdown procedures are ineffective, press and hold the power button for at least 4 seconds to turn off the computer. To learn more about your power settings, use the Power icon. • Right-click the **Power** icon and then, depending on your product, select **Power and sleep settings** or **Power Options**.

Bottom

Use the illustration and table to identify the bottom components.

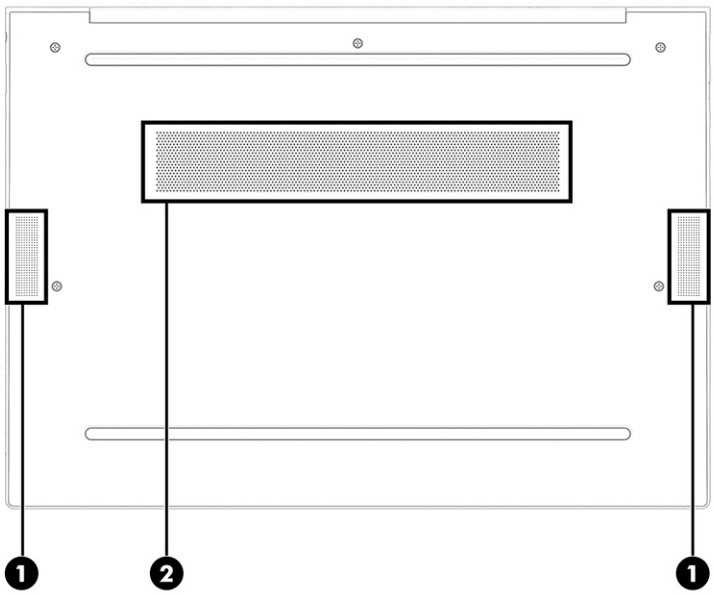

Table 2-8 Bottom components and their descriptions

Component		Description
(1)	Speakers (2)	Produce sound.

Table 2-8 Bottom components and their descriptions (continued)

Component		Description
(2)	Vent	Enables airflow to cool internal components. NOTE: The computer fan starts up automatically to cool internal components and prevent overheating. It is normal for the internal fan to cycle on and off during routine operation.

Rear

Use the illustration and table to identify the rear component.

Table 2-9 Rear component and its description

Component	Description
Vent (select products only)	Enables airflow to cool internal components. NOTE: The computer fan starts up automatically to cool internal components and prevent overheating. It is normal for the internal fan to cycle on and off during routine operation.

Labels

The labels affixed to the computer provide information that you might need when you troubleshoot system problems or travel internationally with the computer. Labels can be in paper form or imprinted on the product.

IMPORTANT: Check the following locations for the labels described in this section: the bottom of the computer, inside the battery bay, under the service door, on the back of the display, or on the bottom of a tablet kickstand.

- Service label—Provides important information to identify your computer. When contacting support, you may be asked for the serial number, the product number, or the model number. Locate this information before you contact support.

  Your service label will resemble one of the following examples. Refer to the illustration that most closely matches the service label on your computer.

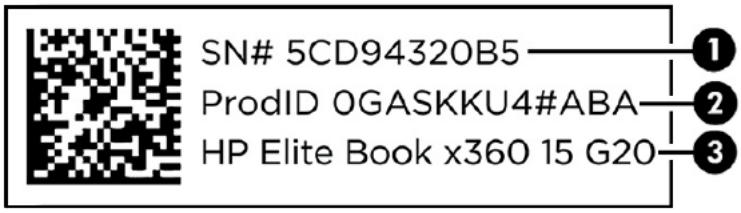

Table 2-10 Service label components and their descriptions

Component	
(1)	Serial number
(2)	Product ID
(3)	HP product name

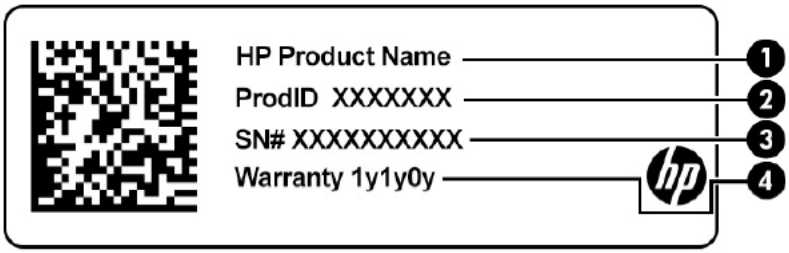

Table 2-11 Service label components and their descriptions

Component	
(1)	HP product name
(2)	Product ID
(3)	Serial number
(4)	Warranty period

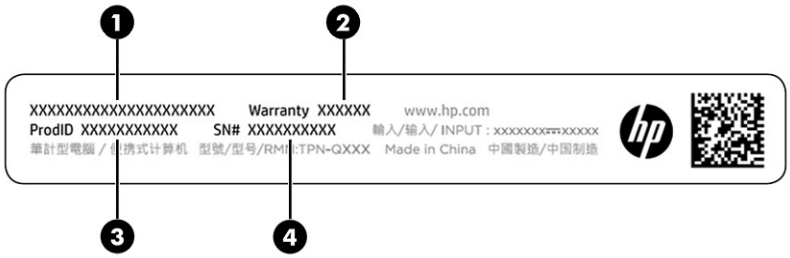

Table 2-12 Service label components and their descriptions

Component	
(1)	HP product name
(2)	Warranty period
(3)	Product ID
(4)	Serial number

- Regulatory labels—Provide regulatory information about the computer.
- Wireless certification labels—Provide information about optional wireless devices and the approval markings for the countries or regions in which the devices have been approved for use.

3 Illustrated parts catalog

Use this table to determine the spare parts that are available for the computer.

Computer major components

To identify the computer major components, use this illustration and table.

NOTE: HP continually improves and changes product parts. For complete and current information about supported parts for your computer, go to http://partsurfer.hp.com, select your country or region, and then follow the on-screen instructions.

NOTE: Details about your computer, including model, serial number, product key, and length of warranty, are on the service tag at the bottom of your computer.

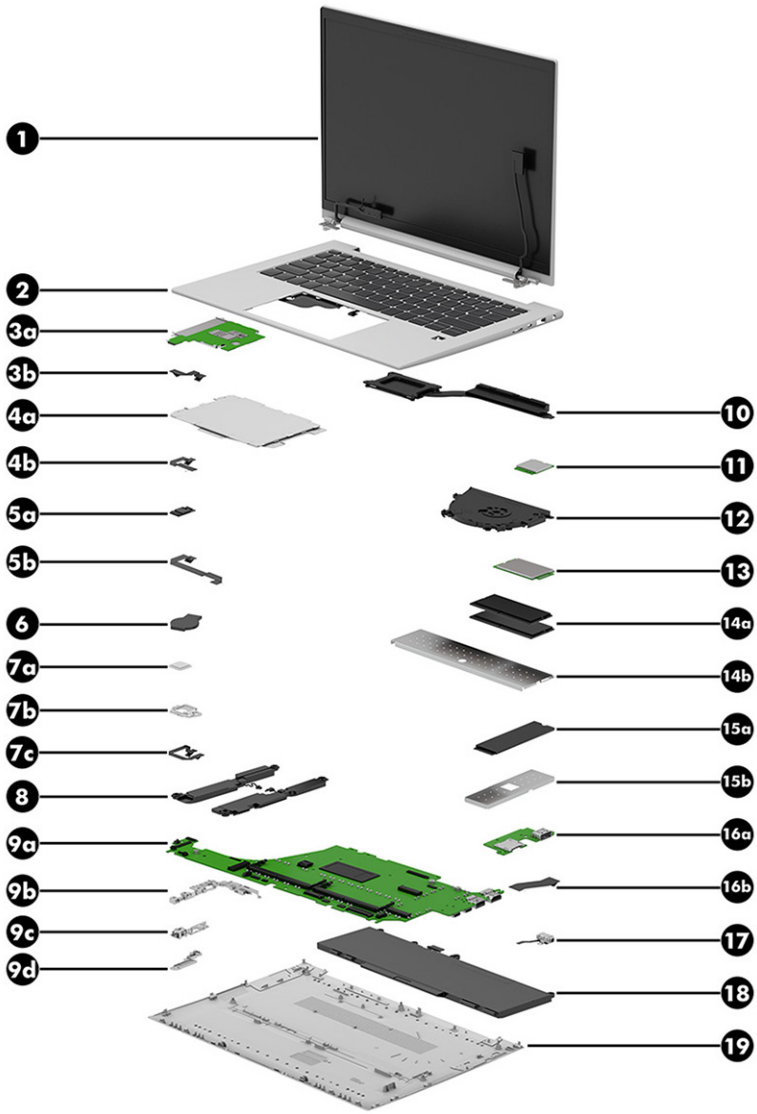

Table 3-1 Computer major component descriptions and part numbers

Item	Component	Spare part number
(1)	**Display assembly:** Display spare parts are available as subcomponents, not as whole units. Display subcomponent spare parts are available. For spare part information, see Display assembly components on page 26.	
(2)	**Top cover/keyboard** backlit and spill-resistant with privacy filter (includes backlight cable and keyboard cable):	
	For use in Belgium	N09059-A41
	For use in Brazil	N09059-201
	For use in Bulgaria	N09059-261
	For use in the Czech Republic and Slovakia	N09059-FL1
	For use in Denmark	N09059-081
	For use in Denmark, Finland, and Norway	N09059-DH1
	For use in France	N09059-051
	For use in French Canada	N09059-DB1

Table 3-1 Computer major component descriptions and part numbers (continued)

Item	Component	Spare part number
	For use in Germany	N09059-041
	For use in Greece	N09059-151
	For use in Hungary	N09059-211
	For use in Iceland	N09059-DD1
	For use in India	N09059-D61
	For use in Israel	N09059-BB1
	For use in Italy	N09059-061
	For use in Japan	N09059-291
	For use in Kazakhstan	N09059-DF1
	For use in Latin America	N09059-161
	For use in the Netherlands	N09059-B31
	For use in North Africa	N09059-FP1
	For use in Norway	N09059-091
	For use in Portugal	N09059-131
	For use in Romania	N09059-261
	For use in Russia	N09059-251
	For use in Saudi Arabia	N09059-171
	For use in Slovenia	N09059-BA1
	For use in South Korea	N09059-AD1
	For use in Spain	N09059-071
	For use in Sweden and Finland	N09059-B71
	For use in Switzerland	N09059-BG1
	For use in Taiwan	N09059-AB1
	For use in Thailand	N09059-281
	For use in Turkey	N09059-141
	For use in Turkey-F	N09059-541
	For use in Ukraine	N09059-BD1
	For use in the United Kingdom	N09059-031
	For use in the United States	N09059-001
(2)	**Top cover/keyboard** backlit and spill-resistant without privacy filter (includes backlight cable and keyboard cable):	
	For use in Belgium	N09058-A41
	For use in Brazil	N09058-201
	For use in Bulgaria	N09058-261
	For use in the Czech Republic and Slovakia	N09058-FL1

Table 3-1 Computer major component descriptions and part numbers (continued)

Item	Component	Spare part number
	For use in Denmark	N09058-081
	For use in Denmark, Finland, and Norway	N09058-DH1
	For use in France	N09058-051
	For use in French Canada	N09058-DB1
	For use in Germany	N09058-041
	For use in Greece	N09058-151
	For use in Hungary	N09058-211
	For use in Iceland	N09058-DD1
	For use in India	N09058-D61
	For use in Israel	N09058-BB1
	For use in Italy	N09058-061
	For use in Japan	N09058-291
	For use in Kazakhstan	N09058-DF1
	For use in Latin America	N09058-161
	For use in the Netherlands	N09058-B31
	For use in North Africa	N09058-FP1
	For use in Norway	N09058-091
	For use in Portugal	N09058-131
	For use in Romania	N09058-261
	For use in Russia	N09058-251
	For use in Saudi Arabia	N09058-171
	For use in Slovenia	N09058-BA1
	For use in South Korea	N09058-AD1
	For use in Spain	N09058-071
	For use in Sweden and Finland	N09058-B71
	For use in Switzerland	N09058-BG1
	For use in Taiwan	N09058-AB1
	For use in Thailand	N09058-281
	For use in Turkey	N09058-141
	For use in Turkey-F	N09058-541
	For use in Ukraine	N09058-BD1
	For use in the United Kingdom	N09058-031
	For use in the United States	N09058-001
(2)	**Top cover/keyboard** spill-resistant without privacy filter (includes keyboard cable):	

Table 3-1 Computer major component descriptions and part numbers (continued)

Item	Component	Spare part number
	For use in Belgium	N09057-A41
	For use in Brazil	N09057-201
	For use in Bulgaria	N09057-261
	For use in the Czech Republic and Slovakia	N09057-FL1
	For use in Denmark	N09057-081
	For use in Denmark, Finland, and Norway	N09057-DH1
	For use in France	N09057-051
	For use in French Canada	N09057-DB1
	For use in Germany	N09057-041
	For use in Greece	N09057-151
	For use in Hungary	N09057-211
	For use in Iceland	N09057-DD1
	For use in India	N09057-D61
	For use in Israel	N09057-BB1
	For use in Italy	N09057-061
	For use in Japan	N09057-291
	For use in Kazakhstan	N09057-DF1
	For use in Latin America	N09057-161
	For use in the Netherlands	N09057-B31
	For use in North Africa	N09057-FP1
	For use in Norway	N09057-091
	For use in Portugal	N09057-131
	For use in Romania	N09057-261
	For use in Russia	N09057-251
	For use in Saudi Arabia	N09057-171
	For use in Slovenia	N09057-BA1
	For use in South Korea	N09057-AD1
	For use in Spain	N09057-071
	For use in Sweden and Finland	N09057-B71
	For use in Switzerland	N09057-BG1
	For use in Taiwan	N09057-AB1
	For use in Thailand	N09057-281
	For use in Turkey	N09057-141
	For use in Turkey-F	N09057-541

Table 3-1 Computer major component descriptions and part numbers (continued)

Item	Component	Spare part number
	For use in Ukraine	N09057-BD1
	For use in the United Kingdom	N09057-031
	For use in the United States	N09057-001
(3a)	**Card reader** NOTE: The card reader spare part kit does not include the card reader cable. The card reader cable is included in the Cable Kit, spare part number N09040-001.	N02323-001
(3b)	**Card reader cable**: Included in the Cable Kit, spare part number N09040-001.	
(4a)	**Touchpad**: NOTE: The touchpad spare part kit does not include the touchpad cable. The touchpad cable is included in the Cable Kit, spare part number N09040-001.	
	Touchpad with NFC module antenna	N15436-001
	Touchpad without NFC module antenna	N09033-001
(4b)	**Touchpad cable**: Included in the Cable Kit, spare part number N09040-001.	
(5a)	**NFC module** NOTE: The NFC module spare part kit does not include the NFC module cable. The NFC module cable is included in the Cable Kit, spare part number N09040-001.	M08706-001
(5b)	**NFC module cable**: Included in the Cable Kit, spare part number N09040-001.	
(6)	**RTC battery** (includes cable and double-sided adhesive)	TBD-001
(7a)	**Fingerprint reader** NOTE: The fingerprint reader spare part kit does not include the fingerprint reader bracket or fingerprint reader cable. The fingerprint reader bracket is included in the Bracket Kit, spare part number N09030-001. The fingerprint reader cable is included in the Cable Kit, spare part number N09040-001.	N02325-001
(7b)	**Fingerprint reader bracket**: Included in the Bracket Kit, spare part number N09030-001.	
(7c)	**Fingerprint reader cable**: Included in the Cable Kit, spare part number N09040-001.	
(8)	**Speaker**s (includes cables, left and right speakers, and 4 rubber isolators)	N09034-001
(9a)	**System board** (includes integrated processor, UMA graphics subsystem, and replacement thermal material):	
	Equipped with an Intel Core i7-1280P 1.8 GHz (turbo up to 4.8 GHz) processor (14 cores, 24 MB Intel Smart Cache, 28 W), OSR, and the Windows 11 operating system	N09056-601
	Equipped with an Intel Core i7-1280P 1.8 GHz (turbo up to 4.8 GHz) processor (14 cores, 24 MB Intel Smart Cache, 28 W), OSR, and a non-Windows operating system	N09056-001
	Equipped with an Intel Core i7-1280P 1.8 GHz (turbo up to 4.8 GHz) processor (14 cores, 24 MB Intel Smart Cache, 28 W), and the Windows 11 operating system	N09055-601
	Equipped with an Intel Core i7-1280P 1.8 GHz (turbo up to 4.8 GHz) processor (14 cores, 24 MB Intel Smart Cache, 28 W), and a non-Windows operating system	N09055-001
	Equipped with an Intel Core i7-1270P 1.6 GHz (turbo up to 4.8 GHz) processor (12 cores, 18 MB Intel Smart Cache, 28 W), OSR, and the Windows 11 operating system	N09053-601
	Equipped with an Intel Core i7-1270P 1.6 GHz (turbo up to 4.8 GHz) processor (12 cores, 18 MB Intel Smart Cache, 28 W), OSR, and a non-Windows operating system	N09053-001

Table 3-1 Computer major component descriptions and part numbers (continued)

Item	Component	Spare part number
	Equipped with an Intel Core i7-1270P 1.6 GHz (turbo up to 4.8 GHz) processor (12 cores, 18 MB Intel Smart Cache, 28 W), and the Windows 11 operating system	N09052-601
	Equipped with an Intel Core i7-1270P 1.6 GHz (turbo up to 4.8 GHz) processor (12 cores, 18 MB Intel Smart Cache, 28 W), and a non-Windows operating system	N09052-001
	Equipped with an Intel Core i7-1265U 1.8 GHz (turbo up to 4.8 GHz) processor (10 cores, 12 MB Intel Smart Cache, 15 W), OSR, and the Windows 11 operating system	N09054-601
	Equipped with an Intel Core i7-1265U 1.8 GHz (turbo up to 4.8 GHz) processor (10 cores, 12 MB Intel Smart Cache, 15 W), OSR, and a non-Windows operating system	N09054-001
	Equipped with an Intel Core i7-1265U 1.8 GHz (turbo up to 4.8 GHz) processor (10 cores, 12 MB Intel Smart Cache, 15 W), and the Windows 11 operating system	N09051-601
	Equipped with an Intel Core i7-1265U 1.8 GHz (turbo up to 4.8 GHz) processor (10 cores, 12 MB Intel Smart Cache, 15 W), and a non-Windows operating system	N09051-001
	Equipped with an Intel Core i7-1260U 2.2 GHz (turbo up to 4.7 GHz) processor (12 cores, 18 MB Intel Smart Cache, 28 W), and the Windows 11 operating system	N09050-601
	Equipped with an Intel Core i7-1260U 2.2 GHz (turbo up to 4.7 GHz) processor (12 cores, 18 MB Intel Smart Cache, 28 W), and a non-Windows operating system	N09050-001
	Equipped with an Intel Core i7-1255U 1.7 GHz (turbo up to 4.7 GHz) processor (10 cores, 12 MB Intel Smart Cache, 15 W), and the Windows 11 operating system	N09049-601
	Equipped with an Intel Core i5-1255U 1.7 GHz (turbo up to 4.7 GHz) processor (10 cores, 12 MB Intel Smart Cache, 15 W), and a non-Windows operating system	N09049-001
	Equipped with an Intel Core i5-1250P 1.7 GHz (turbo up to 4.4 GHz) processor (12 cores, 18 MB Intel Smart Cache, 28 W), OSR, and the Windows 11 operating system	N09047-601
	Equipped with an Intel Core i5-1250P 1.7 GHz (turbo up to 4.4 GHz) processor (12 cores, 18 MB Intel Smart Cache, 28 W), OSR, and a non-Windows operating system	N09047-001
	Equipped with an Intel Core i5-1250P 1.7 GHz (turbo up to 4.4 GHz) processor (12 cores, 18 MB Intel Smart Cache, 28 W), and the Windows 11 operating system	N09046-601
	Equipped with an Intel Core i5-1250P 1.7 GHz (turbo up to 4.4 GHz) processor (12 cores, 18 MB Intel Smart Cache, 28 W), and a non-Windows operating system	N09046-001
	Equipped with an Intel Core i5-1245U 1.6 GHz (turbo up to 4.4 GHz) processor (10 cores, 12 MB Intel Smart Cache, 15 W), OSR, and the Windows 11 operating system	N09048-601
	Equipped with an Intel Core i5-1245U 1.6 GHz (turbo up to 4.4 GHz) processor (10 cores, 12 MB Intel Smart Cache, 15 W), OSR, and a non-Windows operating system	N09048-001
	Equipped with an Intel Core i5-1245U 1.6 GHz (turbo up to 4.4 GHz) processor (10 cores, 12 MB Intel Smart Cache, 15 W), and the Windows 11 operating system	N09045-601
	Equipped with an Intel Core i5-1245U 1.6 GHz (turbo up to 4.4 GHz) processor (10 cores, 12 MB Intel Smart Cache, 15 W), and a non-Windows operating system	N09045-001
	Equipped with an Intel Core i5-1240P 1.7 GHz (turbo up to 4.4 GHz) processor (12 cores, 12 MB Intel Smart Cache, 28 W), OSR, and the Windows 11 operating system	N09044-601
	Equipped with an Intel Core i5-1240P 1.7 GHz (turbo up to 4.4 GHz) processor (12 cores, 12 MB Intel Smart Cache, 28 W), OSR, and a non-Windows operating system	N09044-001
	Equipped with an Intel Core i5-1235U 1.3 GHz (turbo up to 4.4 GHz) processor (10 cores, 12 MB Intel Smart Cache, 15 W), and the Windows 11 operating system	N09043-601
	Equipped with an Intel Core i5-1235U 1.3 GHz (turbo up to 4.4 GHz) processor (10 cores, 12 MB Intel Smart Cache, 15 W), and a non-Windows operating system	N09043-001

Table 3-1 Computer major component descriptions and part numbers (continued)

Item	Component	Spare part number
(9b - 9d)	**I/O brackets**: Included in the Bracket Kit, spare part number N09030-001.	
(10)	**Heat sink** (includes replacement thermal material):	
	For use with computer models equipped with a 28 W processor	N07345-001
	For use with computer models equipped with a 15 W processor	N07344-001
(11)	**WLAN module:**	
	Intel AX211 Wi-Fi 6e + Bluetooth 5.2 M.2 2230 160 MHz CNVi WW WLAN module	M53366-001
	Intel AX211 Wi-Fi 6e + Bluetooth 5.2 M.2 2230 vPro 160 MHz CNVi WW WLAN module	M53363-001
(12)	**Fan** (includes cable and captive screws):	
	For use on computer models equipped with a 28 W processor	N09036-001
	For use on computer models equipped with a 15 W processor	N09035-001
(13)	**WWAN module:**	
	Intel 5000 5G WWAN module	M46335-001
	Intel XMM 7560 R+ LTE-Advanced Pro (Cat 16) WWAN module	M52040-001
(14a)	**Memory module** (SODIMM, DDR5-4800, 1.1v, NECC):	
	32 GB	N05331-001
	16 GB	M97596-001
	8 GB	M97595-001
(14b)	**Memory module shield**: Included in the Bracket Kit, spare part number N09030-001.	
(15a)	**Solid-state drive:**	
	2 TB, M.2 2280, PCIe-4×4, ZTurbo solid-state drive with TLC	M52027-001
	1 TB, 2280, PCIe-4×4, NVMe solid-state drive with TLC	M16560-001
	512 GB, 2280, PCIe-4×4, NVMe solid-state drive with TLC	M17436-001
	512 GB, M.2 2280, PCIe, NVMe, value solid-state drive with TLC	L85364-001
	512 GB, M.2 2280, PCIe-4×4, SED solid-state drive with TLC	M52031-001
	256 GB, M.2 2280, PCIe-4×4, ZTurbo solid-state drive with TLC	M52025-001
	256 GB, M.2 2280, PCIe-4×4, SED solid-state drive with TLC	M52029-001
	256 GB, M.2 2280, PCIe, NVMe, value solid-state drive	L85354-001
(15b)	**Solid-state drive shield**: Included in the Bracket Kit, spare part number N09030-001.	
(16a)	**Connector board** (includes USB port and SIM card slot) NOTE: The connector board spare part kit does not include the I/O bracket or connector board cable. The I/O bracket is included in the Bracket Kit, spare part number N09030-001. The connector board cable is included in the Cable Kit, spare part number N09040-001.	N09042-001
(16b)	**Connector board cable**: Included in the Cable Kit, spare part number N09040-001.	
(17)	**Audio jack** (includes cable)	N11993-001

Table 3-1 **Computer major component descriptions and part numbers (continued)**

Item	Component	Spare part number
(18)	**Battery** (includes cable):	
	3 cell, 51 Whr, 4.68 Ahr, LI	M73466-005
	3 cell, 38 Whr, 3.53 Ahr, LI	M73468-005
(19)	**Bottom cover**:	
	For use on computer models equipped with WWAN capability	N09027-001
	For use on computer models not equipped with WWAN capability	N09026-001

Display assembly subcomponents

To identify the display assembly subcomponents, use this illustration and table.

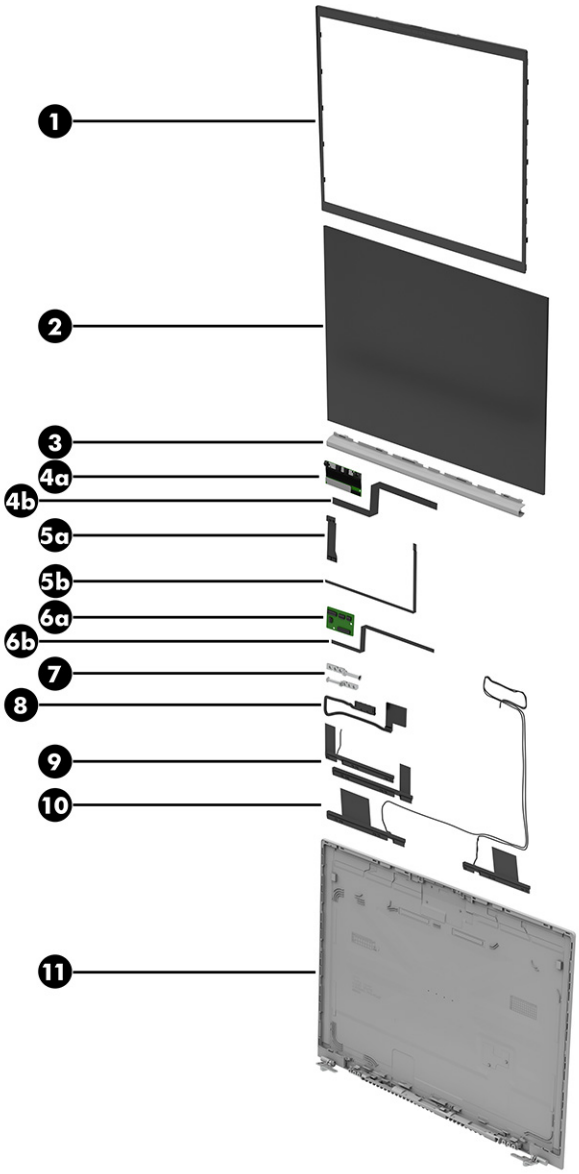

Table 3-2 Display component descriptions and part numbers

Item	Component	Spare part number
(1)	**Display bezel:**	
	For use on display assemblies equipped with infrared	N09021-001
	For use on display assemblies equipped with infrared and ACS	N09024-001
	For use on display assemblies equipped with a microphone	N09023-001
	For use on display assemblies equipped with RGB	N09022-001
	For use on display assemblies equipped with RGB and ACS	N09025-001
(2)	**Display panel:**	
	35.6 cm (14.0 in), LCD, WUXGA (1920 × 1200), antiglare, UWVA, LED, TOP bent display panel; typical brightness: 250 nits	N99947-005

Table 3-2 **Display component descriptions and part numbers (continued)**

Item	Component	Spare part number
	35.6 cm (14.0 in), LCD, WUXGA (1920 × 1200), antiglare, UWVA, WLED + LBL, eDP 1.4 + PSR2, non-TOP bent display panel; typical brightness: 400 nits	N99948-005
	35.6 cm (14.0 in), LCD, WUXGA (1920 × 1200), antiglare, UWVA, WLED + LBL, sRGB 100, eDP 1.3 + PSR, non-TOP bent display panel; typical brightness: 1000 nits	N99949-005
	35.6 cm (14.0 in), LCD, WUXGA (1920 × 1200), antiglare, UWVA, WLED + LBL eDP, non-TOP bent display panel; typical brightness: 400 nits	N99946-005
(3)	**Display hinge cover**	TBD-001
(4a)	**Webcam module:**	
	Infrared	N09061-001
	Non-infrared	N09060-001
(4b)	**Webcam module cable**: Included in the Display Cable Kit, spare part number N09041-001.	
(5a)	**Microphone module**	N15440-001
(5b)	**Microphone module cable**: Included in the Display Cable Kit, spare part number N09041-001.	
(6a)	**Display transfer board:**	
	For use on computer models equipped with a display assembly with ACS	N08540-001
	For use on computer models equipped with a display assembly with infrared	N08541-001
	For use on computer models equipped with a display assembly with RGB	N08542-001
(6b)	**Transfer board cable**: Included in the Display Cable Kit, spare part number N09041-001.	
(7)	**Display hinges** (includes left and right hinges)	N09028-001
(8)	**Display panel cable**: Included in the Display Cable Kit, spare part number N09041-001.	
(9)	**WWAN antenna**: Included in display back cover spare part kit.	
(10)	**WLAN antenna**: Included in display back cover spare part kit.	
(11)	**Display back cover**: Includes left and right WLAN antenna cables and transceivers.	
	For use on computer models equipped with WWAN capability and display panel brightness of 1000 or 400 nits (includes left and right WWAN antenna cables and transceivers)	N09020-001
	For use on computer models equipped without WWAN capability and display panel brightness of 1000 or 400 nits	N09018-001
	For use on computer models equipped with WWAN capability and display panel brightness of 250 nits	N09019-001
	For use on computer models equipped without WWAN capability and display panel brightness of 250 nits	N09017-001

Mass storage devices

To identify the mass storage devices, use this illustration and table.

Table 3-3 Mass storage device descriptions and part numbers

Component	Spare part number
2 TB, M.2 2280, PCIe-4×4, ZTurbo solid-state drive with TLC	M52027-001
1 TB, 2280, PCIe-4×4, NVMe solid-state drive with TLC	M16560-001
512 GB, 2280, PCIe-4×4, NVMe solid-state drive with TLC	M17436-001
512 GB, M.2 2280, PCIe-3×4, NVMe, SS solid-state drive with TLC	L89745-001
512 GB, M.2 2280, PCIe-4×4, SED solid-state drive with TLC	M52031-001
256 GB, M.2 2280, PCIe-4×4, ZTurbo solid-state drive with TLC	M52025-001
256 GB, M.2 2280, PCIe-4×4, SED solid-state drive with TLC	M52029-001
256 GB, M.2 2280, PCIe, NVMe, value solid-state drive	L85354-001

Cables

To identify the cables, use this illustration and table.

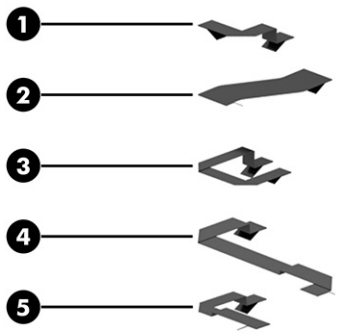

Table 3-4 Cable descriptions and part numbers

Item	Component	Spare part number
	The cables listed below are included in the Cable Kit, spare part number N09040-001.	
(1)	Card reader cable	
(2)	Connector board cable	
(3)	Fingerprint reader cable	
(4)	NFC module cable	
(5)	Touchpad cable	

Miscellaneous parts

To identify the miscellaneous parts, use this table.

Table 3-5 Miscellaneous part descriptions and part numbers

Component	Spare part number
AC adapter:	
280 W AC adapter (PFC, slim, 3P 7.4 mm)	M52952-001
120 W HP Smart Adapter (PFC, slim, 7.4 mm)	L89695-001 and L57117-001
120 W HP Smart Adapter (PFC, RC, 4.5 mm)	M95377-001
65 W AC adapter (nPFC, slim, USB Type-C, straight, 1.8 m [6.0 ft])	L04650-850
65 W AC adapter (nPFC, USB Type-C, RC, 1.8 m [6.0 ft])	L32392-001
65 W AC adapter (travel, nPFC, USB Type-C)	L21847-001
45 W AC adapter (nPFC, USB Type-C, 1.8 m [6.0 ft], 3 pin)	L43407-001
45 W AC adapter (nPFC, wall mount, USB Type-C, 1.8 m [6.0 ft])	L32390-001
45 W AC adapter (nPFC, wall mount, USB Type-C, 1.8 m [6.0 ft], 3 pin)	860210-001
AC adapter + power cord (C5, 1.0 m [3.3 ft], conventional with sticker) bundle for use in Thailand	M85418-001
AC adapter + power cord (C5, 1.0 m [3.3 ft], FDH) bundle for use in Thailand	M85416-001
AC adapter + power cord (C5, 1.0 m [3.3 ft], premium with sticker) bundle for use in Thailand	M85421-001
AC adapter + power cord (C5, 1.0 m [3.3 ft], premium with tag) bundle for use in Thailand	M85419-001
65 W AC adapter (USB Type-C) + power cord (C5, DH, black) bundle for use in South Korea	L43181-001
65 W AC adapter (USB Type-C) + power cord (FDH, 1.8 m [6.0 ft]) bundle:	
For use in Argentina	L43180-001
For use in Australia	L43180-002
For use in Brazil	L43180-003
For use in Denmark	L43180-004
For use in Europe	L43180-005
For use in India	L43180-007
For use in Israel	L43180-006
For use in Italy	L43180-008
For use in North America	L43180-010
For use in the People's Republic of China	L43180-011
For use in South Africa	L43180-012
For use in Switzerland	L43180-013
For use in Taiwan	L43180-015
For use in Thailand	L43180-014
For use in the United Kingdom	L43180-016
45 W AC adapter (USB Type-C) + power cord (C5, DH, black) bundle for use in South Korea	L43183-001
45 W AC adapter (USB Type-C) + power cord (FDH, 1.8 m [6.0 ft]) bundle:	
For use in Argentina	L43182-001

Table 3-5 Miscellaneous part descriptions and part numbers (continued)

Component	Spare part number
For use in Australia	L43182-002
For use in Brazil	L43182-003
For use in Denmark	L43182-004
For use in Europe	L43182-005
For use in India	L43182-007
For use in Israel	L43182-006
For use in Italy	L43182-008
For use in North America	L43182-010
For use in the People's Republic of China	L43182-011
For use in South Africa	L43182-012
For use in Switzerland	L43182-013
For use in Taiwan	L43182-015
For use in Thailand	L43182-014
For use in the United Kingdom	L43182-016
Adapter:	
HP HDMI-to-VGA adapter	701943-001
HP USB 3.0-to-Gigabit FD adapter	914031-001
HP USB 3.0-to-Gigabit RJ-45 adapter	M95984-001
HP USB Type-C-to-DisplayPort adapter	831753-001
HP USB Type-C-to-RJ-45 adapter	M95985-001
HP USB Type-C-to-RJ-45 FD adapter	918779-001
HP USB Type-C-to-USB 3.0 adapter	814648-001
HP USB Type-C-to-VGA adapter	831751-001
HDMI-to-DVI-D adapter connector	691227-001
USB Type-C-to-USB Type-A adapter connector	L65254-001
HP executive 15.6 inch backpack	L59632-001
HP executive 15.6 inch top load backpack	L59631-001
HP business 14.1 inch laptop bag	M55007-001
Bracket Kit (includes connector board I/O bracket, fingerprint reader bracket, memory module shield, SIM bracket, and solid-state drive shield)	N09030-001
Cable:	
USB Type-C male-to-USB Type-C male cable (1.0 m [3.0 ft])	L65253-001
HP Thunderbolt 4 120 W cable (0.8m [2.7 ft])	M88058-001
HP Thunderbolt 4 280 W cable (0.8m [2.7 ft])	M88059-001
HP USB Type-C-to-DisplayPort adapter	831753-001

Table 3-5 Miscellaneous part descriptions and part numbers (continued)

Component	Spare part number
HP USB Type-C-to-RJ-45 adapter	M95985-001
Dock:	
HP 280 W G4 Thunderbolt dock with combination cable	M97106-001
HP 120 W G4 Thunderbolt dock with cable	M97105-001
Cable Kit for HP 120 W G4 Thunderbolt dock	L15812-002
HP 120 W Thunderbolt dock with cable	L15809-001
HP USB Type-A/C universal dock with cable	L64087-001
HP USB Type-C dock with cable	L64086-001
HP dock audio module	L15811-001
HP USB External DV D+-RW Drive	747080-001
Duck head adapter:	
Duck head adapter for us in Japan	L33517-001
Duck head only for use in South Korea (C5, premium)	L50816-001
Duck head only for use in North America (C5, premium with sticker, black)	L50818-002
Duck head only for use in South Korea (C5, premium with sticker, black)	L50818-001
HP USB Type-C-to-USB Type-A hub	916838-001
HP USB Type-C travel hub	L72056-001
HP USB keyboard for use in the United States	L95712-001
Mouse:	
HP Bluetooth travel mouse	L62043-001
HP comfort grip wireless mouse	691922-001
HP USB laser mouse	674318-001
HP USB mouse	L95713-001
HP USB travel mouse	757770-001
Plastics Kit (includes card reader space holder, fingerprint reader space holder, left and right I/O space holders, and SIM space holder)	N09031-001
Power cord (C13, 1.0 m [3.3 ft], premium with tag):	
For use in Argentina	L32029-001
For use in Brazil	L32030-001
Power cord (C13, 1.0 m [3.3 ft], LW, premium with tag):	
For use in Australia	100661-021
For use in Denmark	130627-014
For use in Europe	100614-016
For use in India	403440-008
For use in Israel	398062-011

Table 3-5 Miscellaneous part descriptions and part numbers (continued)

Component	Spare part number
For use in Japan	653326-005
For use in North America	121565-023
For use in the People's Republic of China	286496-024
For use in South Africa	187487-012
For use in South Korea	231216-015
For use in Switzerland	150304-015
For use in Taiwan	393312-008
For use in the United Kingdom	100613-021
Power cord (C5, 1.0 m [3.3 ft], FDH, conventional with sticker):	
For use in Argentina	L19357-001
For use in Australia	L19358-001
For use in Brazil	L19359-001
For use in Denmark	L19360-001
For use in Europe	L19361-001
For use in India	L19363-001
For use in Israel	L19362-001
For use in Italy	L19364-001
For use in Japan	L19365-001
For use in North America	L19367-001
For use in the People's Republic of China	L19368-001
For use in South Africa	L19369-001
For use in South Korea	L19366-001
For use in Switzerland	L19370-001
For use in Taiwan	L19372-001
For use in Thailand	L19371-001
For use in the United Kingdom	L19373-001
Power cord (C5, 1.0 m [3.3 ft], premium with sticker):	
For use in Argentina	L30811-001
For use in Australia	L22327-001
For use in Brazil	L30812-001
For use in Denmark	L22322-001
For use in Europe	L22321-001
For use in India	L22624-001
For use in Israel	L22323-001

Table 3-5 Miscellaneous part descriptions and part numbers (continued)

Component	Spare part number
For use in Italy	L30813-001
For use in Japan	L22330-001
For use in North America	L22319-001
For use in the People's Republic of China	L21930-001
For use in South Africa	L22325-001
For use in South Korea	L22328-001
For use in Switzerland	L22324-001
For use in Taiwan	L22329-001
For use in Thailand	L22326-001
For use in the United Kingdom	L22320-001
Power cord (C5, 1.0 m [3.3 ft], FDH, premium with tag):	
For use in Argentina	920689-003
For use in Australia	L30769-001
For use in Brazil	L30770-001
For use in Denmark	L30771-001
For use in Europe	L30772-001
For use in India	920689-016
For use in Israel	L30773-001
For use in Italy	L30774-001
For use in Japan	L30775-001
For use in North America	L30776-001
For use in the People's Republic of China	920689-014
For use in South Africa	L30777-001
For use in South Korea	L30776-001
For use in Switzerland	L30778-001
For use in Taiwan	L30780-001
For use in Thailand	L30779-001
For use in the United Kingdom	L30781-001
Power cord (C5, 1.8 m [6.0 ft], conventional with sticker):	
For use in Argentina	L19357-002
For use in Australia	L19358-002
For use in Brazil	L19359-002
For use in Denmark	L19360-002
For use in Europe	L19361-002

Table 3-5 Miscellaneous part descriptions and part numbers (continued)

Component	Spare part number
For use in India	L19363-002
For use in Israel	L19362-002
For use in Italy	L19364-002
For use in Japan	L19365-002
For use in North America	L19367-002
For use in the People's Republic of China	L19368-002
For use in South Africa	L19369-002
For use in South Korea	L19366-002
For use in Switzerland	L19370-002
For use in Taiwan	L19372-002
For use in Thailand	L19371-002
For use in the United Kingdom	L19373-002
Screw Kit	N15476-001

4 Removal and replacement procedures preliminary requirements

Use this information to properly prepare to disassemble and reassemble the computer.

Tools required

You need the following tools to complete the removal and replacement procedures:

- Tweezers
- Nonconductive, nonmarking pry tool
- Magnetic Phillips P1 screwdriver

Service considerations

The following sections include some of the considerations that you must keep in mind during disassembly and assembly procedures.

NOTE: As you remove each subassembly from the computer, place the subassembly (and all accompanying screws) away from the work area to prevent damage.

Plastic parts

Using excessive force during disassembly and reassembly can damage plastic parts.

Cables and connectors

Handle cables with extreme care to avoid damage.

IMPORTANT: When servicing the computer, be sure that cables are placed in their proper locations during the reassembly process. Improper cable placement can damage the computer.

Apply only the tension required to unseat or seat the cables during removal and insertion. Handle cables by the connector whenever possible. In all cases, avoid bending, twisting, or tearing cables. Be sure that cables are routed so that they cannot be caught or snagged as you remove or replace parts. Handle flex cables with extreme care; these cables tear easily.

Drive handling

Note the following guidelines when handling drives.

IMPORTANT: Drives are fragile components. Handle them with care. To prevent damage to the computer, damage to a drive, or loss of information, observe these precautions:

Before removing or inserting a hard drive, shut down the computer. If you are unsure whether the computer is off or in Hibernation, turn the computer on, and then shut it down through the operating system.

Before handling a drive, be sure that you are discharged of static electricity. While handling a drive, avoid touching the connector.

Before removing an optical drive, be sure that a disc is not in the drive, and be sure that the optical drive tray is closed.

Handle drives on surfaces covered with at least 2.54 cm (1 inch) of shock-proof foam.

Avoid dropping drives from any height onto any surface.

After removing a hard drive or an optical drive, place it in a static-proof bag.

Avoid exposing an internal hard drive to products that have magnetic fields, such as monitors or speakers.

Avoid exposing a drive to temperature extremes or liquids.

If a drive must be mailed, place the drive in a bubble pack mailer or other suitable form of protective packaging, and label the package "FRAGILE."

Electrostatic discharge information

A sudden discharge of static electricity from your finger or other conductor can destroy static-sensitive devices or microcircuitry. Often the spark is neither felt nor heard, but damage occurs. An electronic device exposed to electrostatic discharge (ESD) might not appear to be affected at all and can work perfectly throughout a normal cycle. The device might function normally for a while, but it has been degraded in the internal layers, reducing its life expectancy.

Networks built into many integrated circuits provide some protection, but in many cases, the discharge contains enough power to alter device parameters or melt silicon junctions.

IMPORTANT: To prevent damage to the device when you remove or install internal components, observe these precautions:

Keep components in their electrostatic-safe containers until you are ready to install them.

Before touching an electronic component, discharge static electricity by using the guidelines described Personal grounding methods and equipment on page 38.

Avoid touching pins, leads, and circuitry. Handle electronic components as little as possible.

If you remove a component, place it in an electrostatic-safe container.

Generating static electricity

Follow these static electricity guidelines.

- Different activities generate different amounts of static electricity.
- Static electricity increases as humidity decreases.

Table 4-1 **Static electricity occurrence based on activity and humidity**

	Relative humidity		
Event	**55%**	**40%**	**10%**
Walking across carpet	7,500 V	15,000 V	35,000 V
Walking across vinyl floor	3,000 V	5,000 V	12,000 V
Motions of bench worker	400 V	800 V	6,000 V
Removing DIPs (dual in-line packages) from plastic tube	400 V	700 V	2,000 V
Removing DIPs from vinyl tray	2,000 V	4,000 V	11,500 V
Removing DIPs from polystyrene foam	3,500 V	5,000 V	14,500 V
Removing bubble pack from PCB (printed circuit board)	7,000 V	20,000 V	26,500 V
Packing PCBs in foam-lined box	5,000 V	11,000 V	21,000 V
Multiple electric components can be packaged together in plastic tubes, trays, or polystyrene foam.			

NOTE: As little as 700 V can degrade a product.

Preventing electrostatic damage to equipment

Many electronic components are sensitive to ESD. Circuitry design and structure determine the degree of sensitivity. The following packaging and grounding precautions are necessary to prevent static electricity damage to electronic components.

- To avoid hand contact, transport products in static-safe containers such as tubes, bags, or boxes.
- Protect all electrostatic parts and assemblies with conductive or approved containers or packaging.
- Keep electrostatic-sensitive parts in their containers until they arrive at static-free stations.
- Place items on a grounded surface before removing them from their container.
- Always be properly grounded when touching a sensitive component or assembly.
- Avoid contact with pins, leads, or circuitry.
- Place reusable electrostatic-sensitive parts from assemblies in protective packaging or conductive foam.

Personal grounding methods and equipment

Using certain equipment can prevent static electricity damage to electronic components.

- **Wrist straps** are flexible straps with a maximum of 1 MΩ ±10% resistance in the ground cords. To provide proper ground, a strap must be worn snug against bare skin. The ground cord must be connected and fit snugly into the banana plug connector on the grounding mat or workstation.
- **Heel straps/Toe straps/Boot straps** can be used at standing workstations and are compatible with most types of shoes or boots. On conductive floors or dissipative floor mats, use them on both feet with a maximum of 1 MΩ ±10% resistance between the operator and ground.

Table 4-2 **Static shielding protection levels**

Static shielding protection levels	
Method	**Voltage**
Antistatic plastic	1,500
Carbon-loaded plastic	7,500
Metallized laminate	15,000

Grounding the work area

To prevent static damage at the work area, follow these precautions.

- Cover the work surface with approved static-dissipative material.
- Use a wrist strap connected to a properly grounded work surface and use properly grounded tools and equipment.
- Use static-dissipative mats, foot straps, or air ionizers to give added protection.
- Handle electrostatic sensitive components, parts, and assemblies by the case or PCB laminate. Handle them only at static-free work areas.
- Turn off power and input signals before inserting and removing connectors or test equipment.
- Use fixtures made of static-safe materials when fixtures must directly contact dissipative surfaces.
- Keep the work area free of nonconductive materials, such as ordinary plastic assembly aids and polystyrene foam.
- Use conductive field service tools, such as cutters, screwdrivers, and vacuums.
- Avoid contact with pins, leads, or circuitry.

Recommended materials and equipment

HP recommends certain materials and equipment to prevent static electricity.

- Antistatic tape
- Antistatic smocks, aprons, or sleeve protectors
- Conductive bins and other assembly or soldering aids
- Conductive foam
- Conductive tabletop workstations with ground cord of 1 MΩ ±10% resistance
- Static-dissipative table or floor mats with hard tie to ground
- Field service kits
- Static awareness labels
- Wrist straps and footwear straps providing 1 MΩ ±10% resistance
- Material handling packages

- Conductive plastic bags
- Conductive plastic tubes
- Conductive tote boxes
- Opaque shielding bags
- Transparent metallized shielding bags
- Transparent shielding tubes

Cleaning your computer

Cleaning your computer regularly removes dirt and debris so that your device continues to operate at its best. Use the following information to safely clean the external surfaces of your computer.

Enabling HP Easy Clean (select products only)

HP Easy Clean helps you to avoid accidental input while you clean the computer surfaces. This software disables devices such as the keyboard, touch screen, and touchpad for a preset amount of time so that you can clean all computer surfaces.

1. Start HP Easy Clean in one of the following ways:
   - Select the **Start** menu, and then select **HP Easy Clean**.

     – or –
   - Select the **HP Easy Clean** icon in the taskbar.

     – or –
   - Select **Start**, and then select the **HP Easy Clean** tile.
2. Now that your device is disabled for a short period, see Removing dirt and debris from your computer on page 40 for the recommended steps to clean the high-touch, external surfaces on your computer. After you remove the dirt and debris, you can also clean the surfaces with a disinfectant. See Cleaning your computer with a disinfectant on page 41 for guidelines to help prevent the spread of harmful bacteria and viruses.

Removing dirt and debris from your computer

Here are the recommended steps to clean dirt and debris from your computer.

For computers with wood veneer, see Caring for wood veneer (select products only) on page 42.

1. Wear disposable gloves made of latex (or nitrile gloves, if you are latex-sensitive) when cleaning the surfaces.
2. Turn off your device and unplug the power cord and other connected external devices. Remove any installed batteries from items such as wireless keyboards.

   ⚠ **CAUTION:** To prevent electric shock or damage to components, never clean a product while it is turned on or plugged in.

3. Moisten a microfiber cloth with water. The cloth should be moist, but not dripping wet.

IMPORTANT: To avoid damaging the surface, avoid abrasive cloths, towels, and paper towels.

4. Wipe the exterior of the product gently with the moistened cloth.

IMPORTANT: Keep liquids away from the product. Avoid getting moisture in any openings. If liquid makes its way inside your HP product, it can cause damage to the product. Do not spray liquids directly on the product. Do not use aerosol sprays, solvents, abrasives, or cleaners containing hydrogen peroxide or bleach that might damage the finish.

5. Start with the display (if applicable). Wipe carefully in one direction, and move from the top of the display to the bottom. Finish with any flexible cables, like power cord, keyboard cable, and USB cables.

6. Be sure that surfaces have completely air-dried before turning the device on after cleaning.

7. Discard the gloves after each cleaning. Clean your hands immediately after you remove the gloves.

See Cleaning your computer with a disinfectant on page 41 for recommended steps to clean the high-touch, external surfaces on your computer to help prevent the spread of harmful bacteria and viruses.

Cleaning your computer with a disinfectant

The World Health Organization (WHO) recommends cleaning surfaces, followed by disinfection, as a best practice for preventing the spread of viral respiratory illnesses and harmful bacteria.

After cleaning the external surfaces of your computer using the steps in Removing dirt and debris from your computer on page 40, Caring for wood veneer (select products only) on page 42, or both, you might also choose to clean the surfaces with a disinfectant. A disinfectant that is within HP's cleaning guidelines is an alcohol solution consisting of 70% isopropyl alcohol and 30% water. This solution is also known as rubbing alcohol and is sold in most stores.

Follow these steps when disinfecting high-touch, external surfaces on your computer:

1. Wear disposable gloves made of latex (or nitrile gloves, if you are latex-sensitive) when cleaning the surfaces.

2. Turn off your device and unplug the power cord and other connected external devices. Remove any installed batteries from items such as wireless keyboards.

CAUTION: To prevent electric shock or damage to components, never clean a product while it is turned on or plugged in.

3. Moisten a microfiber cloth with a mixture of 70% isopropyl alcohol and 30% water. The cloth should be moist, but not dripping wet.

CAUTION: Do not use any of the following chemicals or any solutions that contain them, including spray-based surface cleaners: bleach, peroxides (including hydrogen peroxide), acetone, ammonia, ethyl alcohol, methylene chloride, or any petroleum-based materials, such as gasoline, paint thinner, benzene, or toluene.

IMPORTANT: To avoid damaging the surface, avoid abrasive cloths, towels, and paper towels.

4. Wipe the exterior of the product gently with the moistened cloth.

> **IMPORTANT:** Keep liquids away from the product. Avoid getting moisture in any openings. If liquid makes its way inside your HP product, it can cause damage to the product. Do not spray liquids directly on the product. Do not use aerosol sprays, solvents, abrasives, or cleaners containing hydrogen peroxide or bleach that might damage the finish.

5. Start with the display (if applicable). Wipe carefully in one direction, and move from the top of the display to the bottom. Finish with any flexible cables, like power cord, keyboard cable, and USB cables.
6. Be sure that surfaces have completely air-dried before turning the device on after cleaning.
7. Discard the gloves after each cleaning. Clean your hands immediately after you remove the gloves.

Caring for wood veneer (select products only)

Your product might feature high-quality wood veneer. As with all natural wood products, proper care is important for best results over the life of the product. Because of the nature of natural wood, you might see unique variations in the grain pattern or subtle variations in color, which are normal.

- Clean the wood with a dry, static-free microfiber cloth or chamois.
- Avoid cleaning products containing substances such as ammonia, methylene chloride, acetone, turpentine, or other petroleum-based solvents.
- Do not expose the wood to sun or moisture for long periods of time.
- If the wood becomes wet, dry it by dabbing with an absorbent, lint-free cloth.
- Avoid contact with any substance that might dye or discolor the wood.
- Avoid contact with sharp objects or rough surfaces that might scratch the wood.

See Removing dirt and debris from your computer on page 40 for the recommended steps to clean the high-touch, external surfaces on your computer. After you remove the dirt and debris, you can also clean the surfaces with a disinfectant. See Cleaning your computer with a disinfectant on page 41 for sanitizing guidelines to help prevent the spread of harmful bacteria and viruses.

Packaging and transporting guidelines

Follow these grounding guidelines when packaging and transporting equipment.

- To avoid hand contact, transport products in static-safe tubes, bags, or boxes.
- Protect ESD-sensitive parts and assemblies with conductive or approved containers or packaging.
- Keep ESD-sensitive parts in their containers until the parts arrive at static-free workstations.
- Place items on a grounded surface before removing items from their containers.
- Always be properly grounded when touching a component or assembly.
- Store reusable ESD-sensitive parts from assemblies in protective packaging or nonconductive foam.

- Use transporters and conveyors made of antistatic belts and roller bushings. Be sure that mechanized equipment used for moving materials is wired to ground and that proper materials are selected to avoid static charging. When grounding is not possible, use an ionizer to dissipate electric charges.

Accessing support information

Use this information to find the HP support that you need.

Table 4-3 **Support information locations**

Service consideration	Path to access information
Records of reported failure incidents stored on the computer	**Windows:** Pre-operating system failures are logged in the BIOS Event Log. To view the BIOS Event Log: 1. Press the power button. 2. Immediately and repeatedly press esc when the power button light turns white. NOTE: If you do not press esc at the appropriate time, you must restart the computer and again repeatedly press esc when the power button light turns white to access the utility. 3. Press f10 to enter the BIOS setup. 4. (On commercial products) Under the **Main** tab, select **BIOS event log**, and then select **View BIOS Event Log**. - or - (On consumer products) Under the **Main** tab, select **System Log**. Post operating system failures are logged in the Event Viewer. 1. Turn on the computer and allow the operating system to open. 2. Click the search icon in the taskbar. 3. Type `Event Viewer`, and then press enter. 4. Select the log from the left panel. Details display in the right panel. **Chrome:** 1. Go to support.google.com/chrome. 2. Search `collect Chrome device logs`.
Technical bulletins	To locate technical bulletins: 1. Go to www.hp.com. 2. Place the cursor over **Problem solving** to display more options. 3. Select **Support & Troubleshooting**. 4. Type the serial number, product number, or product name to go to the product support page. 5. Select **Advisories** to view technical bulletins.

Table 4-3 **Support information locations (continued)**

Service consideration	Path to access information
Repair professionals	To locate repair professionals: 1. Go to www.hp.com. 2. Place the cursor over **Support resources** to display more options. 3. Select **Authorized service providers**.
Component and diagnosis information, failure detection, and required action	To locate diagnosis information and actions: 1. Go to http://www.hp.com/go/techcenter/pcdiags. 2. Select **Get Support**. 3. Near the bottom of the window, select **Notebook PCs**, and then select your location.

5 Removal and replacement procedures for authorized service provider parts

This chapter provides removal and replacement procedures for authorized service provider parts.

IMPORTANT: Components described in this chapter should be accessed only by an authorized service provider. Accessing these parts can damage the computer or void the warranty.

NOTE: Details about your computer, including model, serial number, product key, and length of warranty, are on the service tag at the bottom of your computer.

Component replacement procedures

To remove and replace computer components, use these procedures.

NOTE: HP continually improves and changes product parts. For complete and current information about supported parts for your computer, go to http://partsurfer.hp.com, select your country or region, and then follow the on-screen instructions.

You must remove, replace, or loosen as many as xx screws when you service the parts described in this chapter. Make special note of each screw size and location during removal and replacement.

Preparation for disassembly

To remove and replace computer components, use these procedures.

See Removal and replacement procedures preliminary requirements on page 36 for initial safety procedures.

1. Turn off the computer. If you are unsure whether the computer is off or in Hibernation, turn the computer on, and then shut it down through the operating system.
2. Disconnect the power from the computer by unplugging the power cord from the computer.
3. Disconnect all external devices from the computer.

Bottom cover

To remove the bottom cover, use this procedure and illustration.

Table 5-1 **Bottom cover description and part numbers**

Description	Spare part number
For use on computer models equipped with WWAN capability	N09027-001
For use on computer models not equipped with WWAN capability	N09026-001

Before removing the bottom cover, prepare the computer for disassembly (see Preparation for disassembly on page 45).

Remove the bottom cover:

1. Loosen the five Phillips captive screws that secure the bottom cover to the computer.

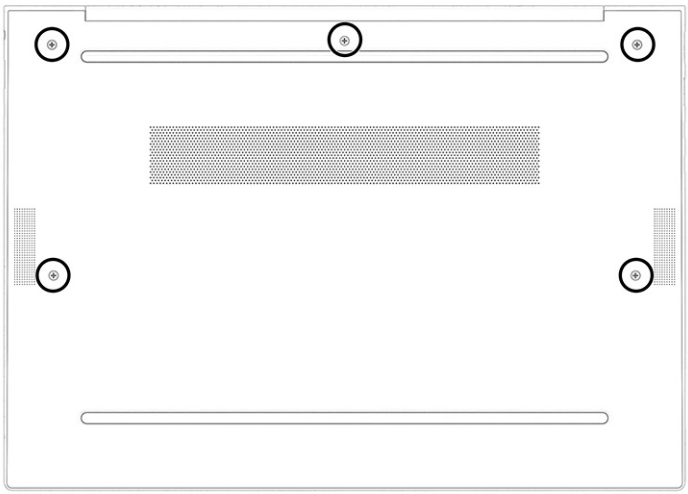

2. Use a nonmarking, nonconductive tool **(1)** to separate the rear edge of the bottom cover **(2)** from the computer.

3. Remove the bottom cover **(3)** from the computer **(2)**.

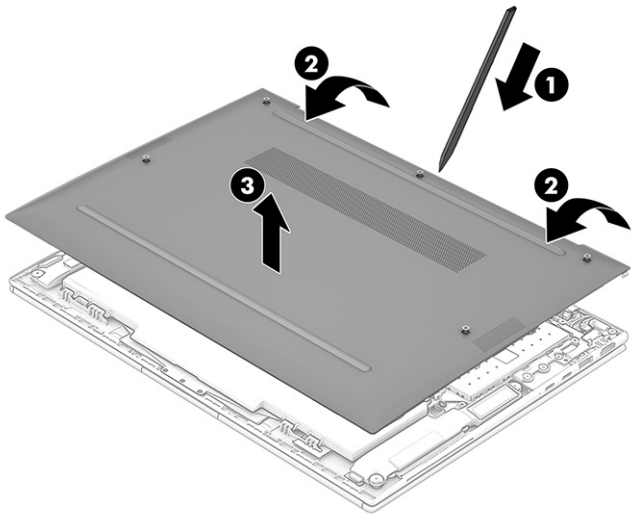

4. Thoroughly clean the thermal material from the surfaces of the WWAN module and the bottom cover each time the bottom cover is removed. Replacement thermal material is included with the bottom cover spare part kit. The following illustration shows the replacement thermal material locations.

   A thermal pad is used on the WWAN module **(1)** and on the bottom cover area **(2)** that services it.

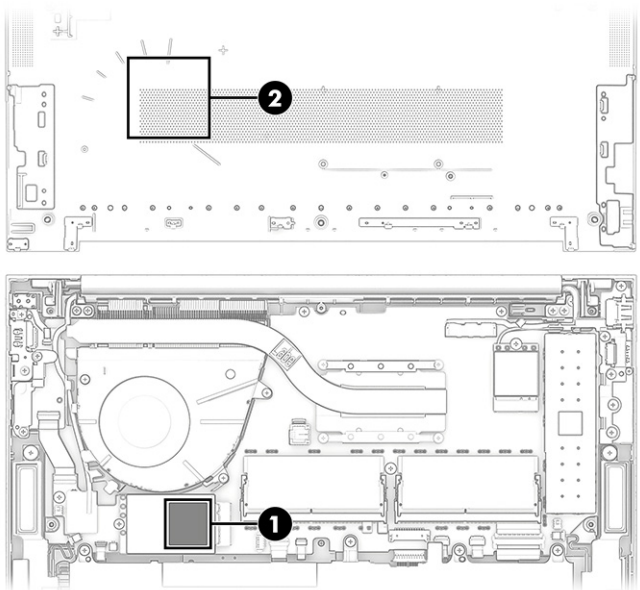

To replace the bottom cover, reverse the removal procedures.

Battery

To remove the battery, use this procedure and illustration.

Table 5-2 **Battery description and part numbers**

Description	Spare part number
Battery (includes cable):	
3 cell, 51 Whr, 4.68 Ahr, LI	M73466-005
3 cell, 38 Whr, 3.53 Ahr, LI	M73468-005

WARNING! To avoid personal injury and damage to the product:

- Do *not* puncture, twist, or crack the battery.
- Do *not* cause an external puncture or rupture to the battery. They can cause a short inside the battery, which can result in battery thermal runaway.
- Do *not* handle or touch the battery enclosure with sharp objects such as tweezers or pliers, which might puncture the battery.
- Do *not* compress or squeeze the battery case with tools or heavy objects stacked on top of the case. These actions can apply undue force on the battery.
- Do *not* touch the connectors with any metallic surface or object, such as metal tools, screws, or coins, which can cause shorting across the connectors.

Before removing the battery, follow these steps:

1. Prepare the computer for disassembly (see Preparation for disassembly on page 45).
2. Remove the bottom cover (see Bottom cover on page 45).

WARNING! To reduce potential safety issues, use only the user-replaceable battery provided with the computer, a replacement battery provided by HP, or a compatible battery purchased from HP.

IMPORTANT: Removing a battery that is the sole power source for the computer can cause loss of information. To prevent loss of information, save your work or shut down the computer through Windows before you remove the battery.

Remove the battery:

1. Disconnect the battery cable **(1)** from the system board.
2. Remove the four Phillips M2.0 × 4.5 screws **(2)** that secure the battery to the computer.
3. Swing the rear edge of the battery **(3)** up and forward until it rests at an angle.

4. Remove the battery **(4)** by sliding it up and back at an angle.

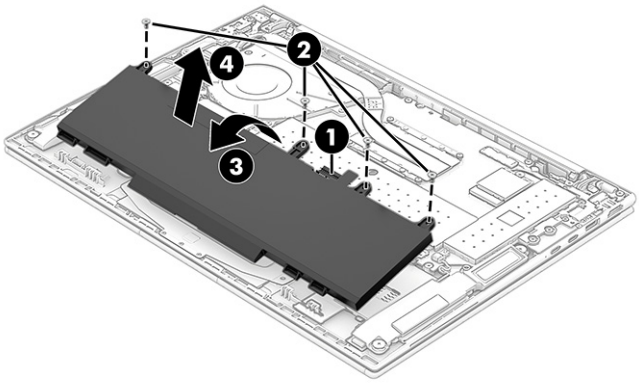

To insert the battery, reverse the removal procedures.

WWAN module

To remove the WWAN module, use this procedure and illustration.

Table 5-3 **WWAN module description and part numbers**

Description	Spare part number
Intel 5000 5G WWAN module	M46335-001
Intel XMM 7560 R+ LTE-Advanced Pro (Cat 16) WWAN module	M52040-001

IMPORTANT: To prevent an unresponsive system, replace the wireless module only with a wireless module authorized for use in the computer by the governmental agency that regulates wireless devices in your country or region. If you replace the module and then receive a warning message, remove the module to restore device functionality, and then contact technical support.

Before removing the WWAN module, follow these steps:

1. Prepare the computer for disassembly (see Preparation for disassembly on page 45).
2. Remove the bottom cover (see Bottom cover on page 45).
3. Disconnect the battery cable from the system board (see Battery on page 47).

Remove the WWAN module:

1. Carefully disconnect the WWAN module antenna cables **(1)** from the WWAN module.

NOTE: Computer models have one to four WWAN module antenna cables. The antenna cables have tags that identify them with a number that corresponds to a terminal on the WWAN module. Connect the antenna cable to the corresponding WWAN module terminal.

2. Remove the Phillips M2.0 × 2.5 screw **(2)**, and then remove the WWAN module **(3)**.

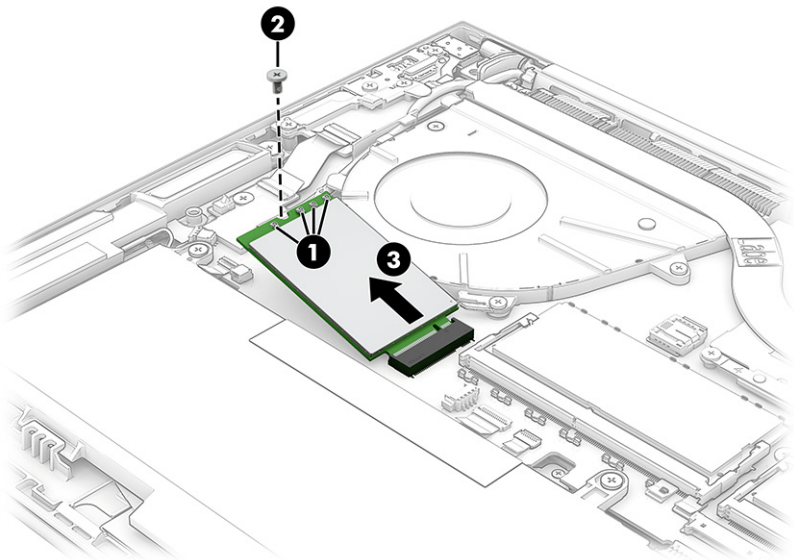

3. If the WWAN module antenna is not connected to the terminal on the WWAN module, install a protective sleeve on the antenna connector, as shown in the following illustration.

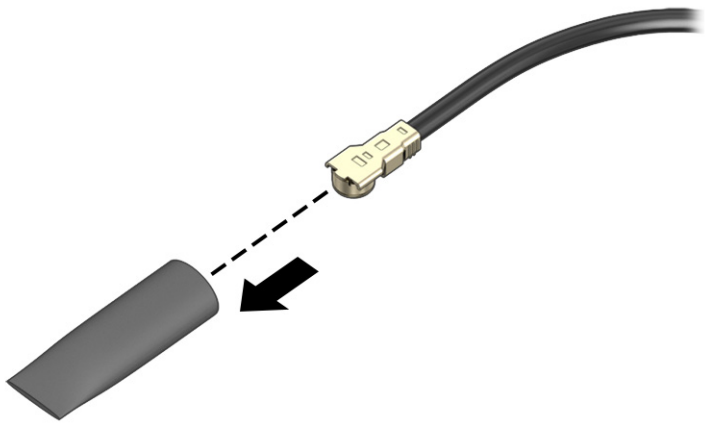

Reverse this procedure to install the WWAN module.

WLAN module

To remove the WLAN module, use this procedure and illustration.

Table 5-4 **WLAN module descriptions and part numbers**

Description	Spare part number
Intel AX211 Wi-Fi 6e + Bluetooth 5.2 M.2 2230 160 MHz CNVi WW WLAN module	M53366-001

Table 5-4 WLAN module descriptions and part numbers (continued)

Description	Spare part number
Intel AX211 Wi-Fi 6e + Bluetooth 5.2 M.2 2230 vPro 160 MHz CNVi WW WLAN module	M53363-001

IMPORTANT: To prevent an unresponsive system, replace the wireless module only with a wireless module authorized for use in the computer by the governmental agency that regulates wireless devices in your country or region. If you replace the module and then receive a warning message, remove the module to restore device functionality, and then contact technical support.

Before removing the WLAN module, follow these steps:

1. Prepare the computer for disassembly (see Preparation for disassembly on page 45).
2. Remove the bottom cover (see Bottom cover on page 45).
3. Disconnect the battery cable from the system board (see Battery on page 47).

Remove the WLAN module:

1. Carefully disconnect the WLAN module antenna cables from the WLAN module **(1)**.

   NOTE: Computer models have either one or two WLAN module antennas. On models with two antennas, the #1 white WLAN module antenna cable connects to the WLAN module #1 Main terminal. The #2 black WLAN module antenna cable connects to the WLAN module #1 Aux terminal.

2. Remove the Phillips M2.0 × 2.5 screw **(2)**, and then remove the WLAN module **(3)**.

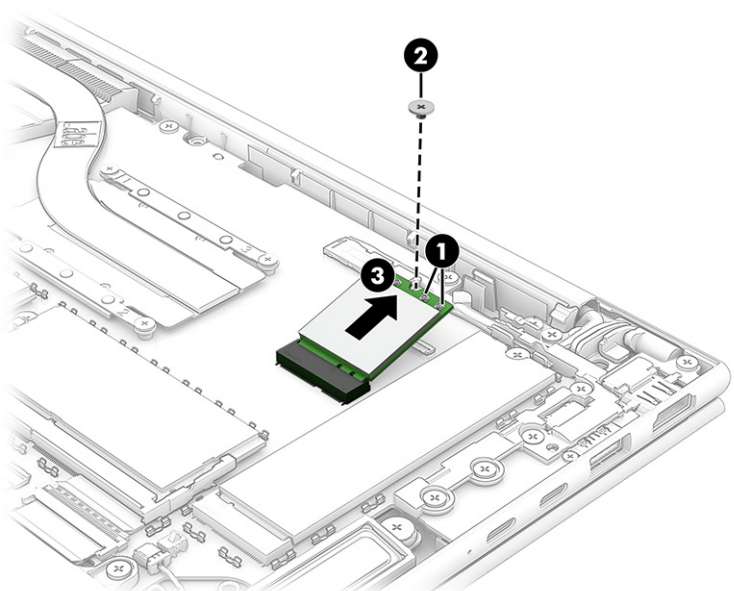

3. If the WLAN module antenna is not connected to the terminal on the WLAN module, install a protective sleeve on the antenna connector, as shown in the following illustration.

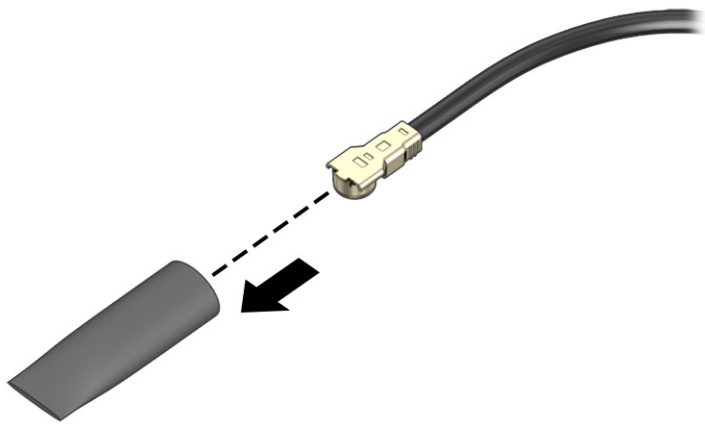

Reverse this procedure to install the WLAN module.

Speakers

To remove the speakers, use this procedure and illustration.

Table 5-5 **Speakers description and part number**

Description	Spare part number
Speakers (include cables, left and right speakers, and 4 rubber isolators)	N15439-001

Before removing the speakers, follow these steps:

1. Prepare the computer for disassembly (see Preparation for disassembly on page 45).
2. Remove the bottom cover (see Bottom cover on page 45).
3. Disconnect the battery cable from the system board (see Battery on page 47).

Remove the speakers:

1. Disconnect the speaker cables **(1)** from the system board.
2. Remove the four Phillips M2.0 × 2.4 broad head screws **(2)** that secure the speakers to the computer.
3. Remove the speakers from the computer **(3)**.

   When removing the speakers, make note of the location of the four rubber isolator locations **(4)**. The absence of or damage to these isolators can result in degraded speaker performance.

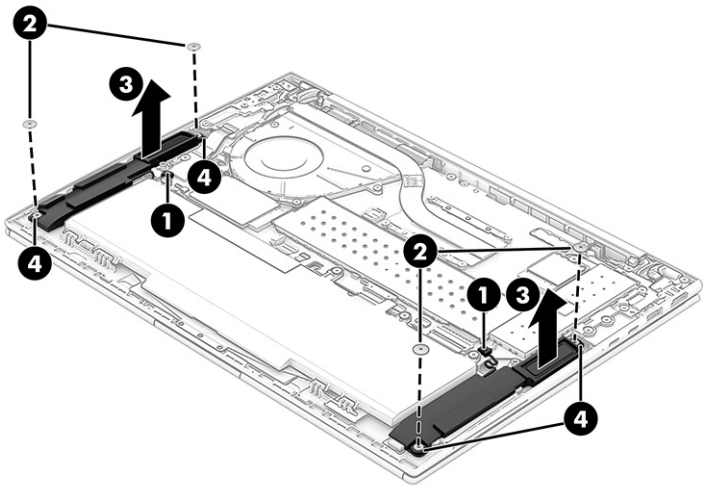

Reverse this procedure to install the speakers.

Memory modules

To remove the memory modules, use this procedure and illustration.

Table 5-6 **Memory module descriptions and part numbers**

Description	Spare part number
32 GB (SODIMM, DDR5-4800, 1.1v, NECC)	N05331-001
16 GB (SODIMM, DDR5-4800, 1.1v, NECC)	M97596-001
8 GB (SODIMM, DDR5-4800, 1.1v, NECC)	M97595-001
Memory module shield: Included in the Bracket Kit, spare part number N09030-001.	

Before removing the memory, follow these steps:

1. Prepare the computer for disassembly (see Preparation for disassembly on page 45).
2. Remove the bottom cover (see Bottom cover on page 45).
3. Disconnect the battery cable from the system board (see Battery on page 47).

If you are replacing a memory module, remove the existing memory module:

1. Remove the memory module shield.

   The memory shield is included in the Bracket Kit, spare part number N09030-001.

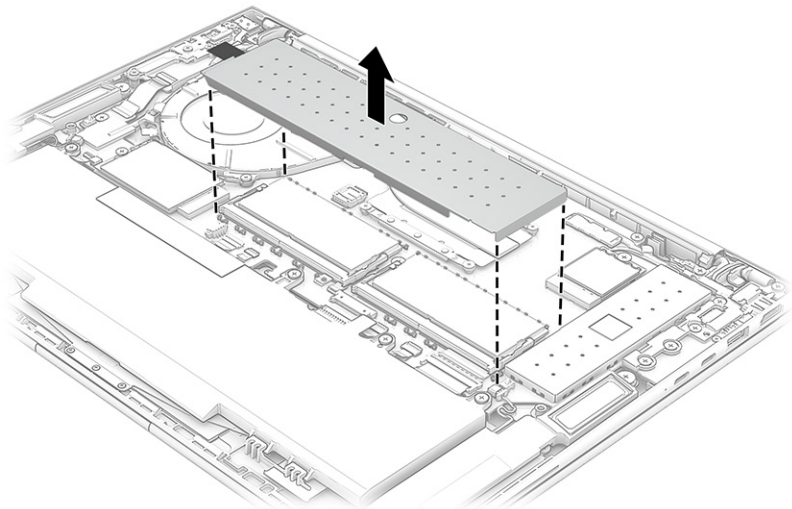

2. Spread the two retention clips outward **(1)** until the memory module tilts up at a 45° angle, and then remove the module **(2)**. Use the same procedure to remove all memory modules.

IMPORTANT: To prevent damage to the memory module, hold the memory module by the edges only. Do not touch the components on the memory module.

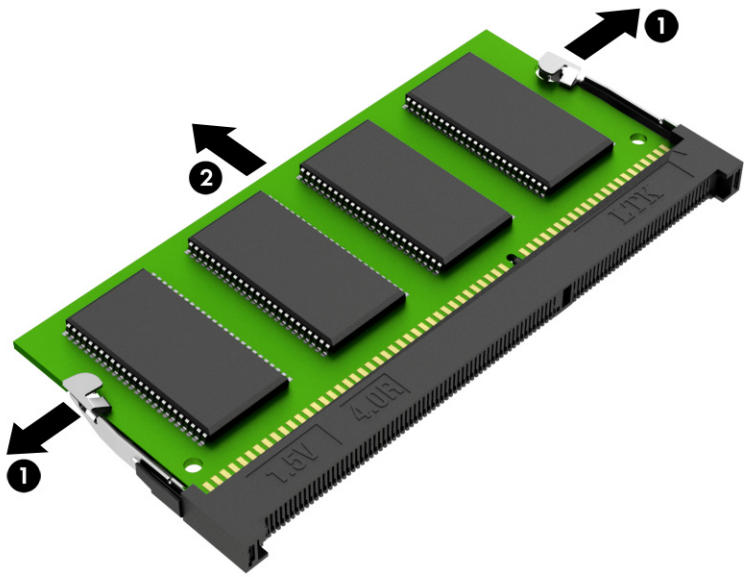

To protect a memory module after removal, place it in an electrostatic-safe container.

To install a memory module:

1. Align the notched edge of the module with the tab in the slot **(1)**, and then press the module into the slot at an angle until it is seated **(2)**.

2. Press down on the module until the side retention clips snap into place **(3)**.

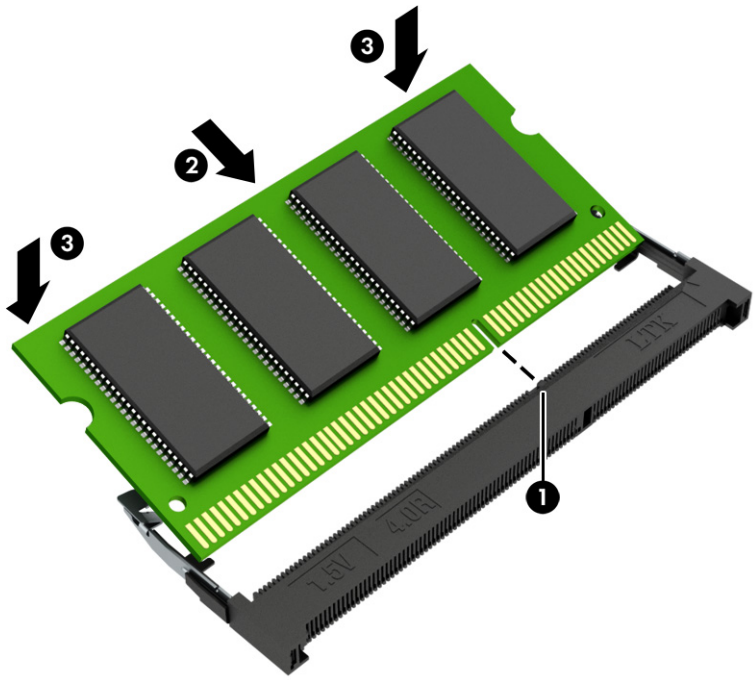

Solid-state drive

To remove the M.2 solid-state drive, use this procedure and illustration.

Table 5-7 **Solid-state drive descriptions and part numbers**

Description	Spare part number
2 TB, M.2 2280, PCIe-4×4, ZTurbo solid-state drive with TLC	M52027-001
1 TB, 2280, PCIe-4×4, NVMe solid-state drive with TLC	M16560-001
512 GB, 2280, PCIe-4×4, NVMe solid-state drive with TLC	M17436-001
512 GB, M.2 2280, PCIe, NVMe, value solid-state drive with TLC	L85364-001
512 GB, M.2 2280, PCIe-4×4, SED solid-state drive with TLC	M52031-001
256 GB, M.2 2280, PCIe-4×4, ZTurbo solid-state drive with TLC	M52025-001
256 GB, M.2 2280, PCIe-4×4, SED solid-state drive with TLC	M52029-001
Solid-state drive shield: Included in the Bracket Kit, spare part number N09030-001.	L85354-001

Before removing the solid-state drive, follow these steps:

1. Prepare the computer for disassembly (see Preparation for disassembly on page 45).
2. Remove the bottom cover (see Bottom cover on page 45).
3. Disconnect the battery cable from the system board (see Battery on page 47).

Remove the solid-state drive:

1. Remove the solid-state drive shield.

   The solid-state drive shield is included in the Bracket Kit, spare part number N09030-001.

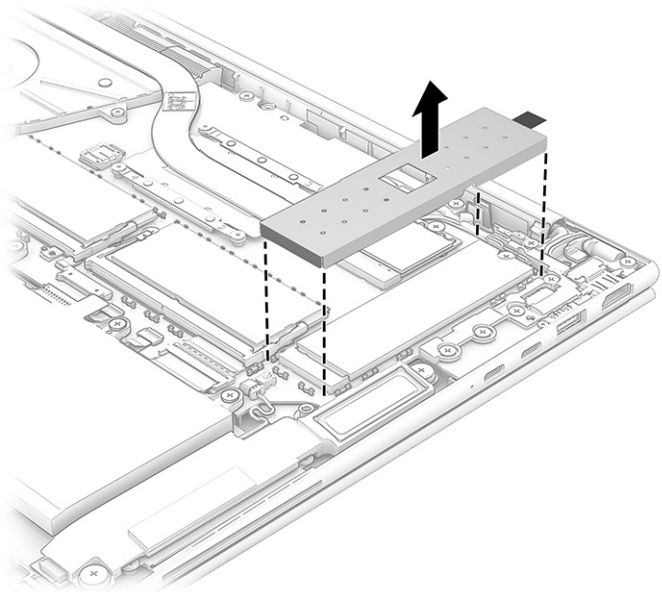

2. Thoroughly clean the thermal material from the surfaces of the solid-state drive shield and the solid-state drive shield each time the solid-state drive shield is removed. Replacement thermal material is included with the solid-state drive shield spare part kit. The following illustration shows the replacement thermal material locations.

   A thermal pad is used on the solid-state drive shield **(1)** and on the solid-state drive shield area **(2)** that services it.

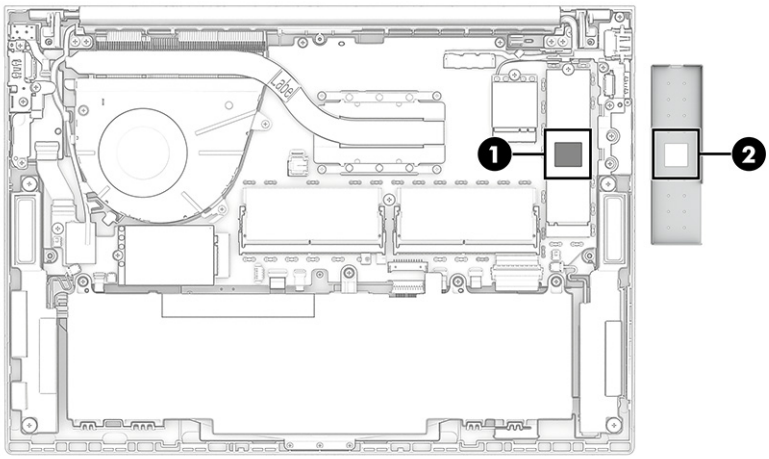

3. Remove the Phillips M2.0 × 2.5 screw **(1)** that secures the drive to the computer.

4. Pull the drive **(2)** away from the socket to remove it **(2)**.

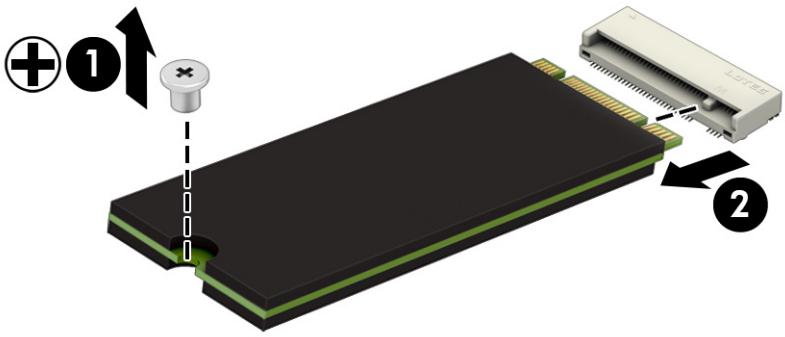

To install the solid-state drive, reverse the removal procedures.

NOTE: Solid-state drives are designed with a notch to prevent incorrect insertion.

Audio jack

To remove the audio jack, use this procedure and illustration.

Table 5-8 **Audio jack description and part number**

Description	Spare part number
Audio jack (includes cable)	N11993-001

Before removing the audio jack, follow these steps:

1. Prepare the computer for disassembly (see Preparation for disassembly on page 45).
2. Remove the bottom cover (see Bottom cover on page 45).
3. Disconnect the battery cable from the system board (see Battery on page 47).

Remove the audio jack:

1. Remove the Phillips M2.0 × 2.5 screw **(1)** that secures the audio jack to the computer.
2. Release the zero insertion force (ZIF) connector **(2)** to which the audio jack cable is connected, and then disconnect the cable from the system board.

3. Remove the audio jack **(3)** from the computer.

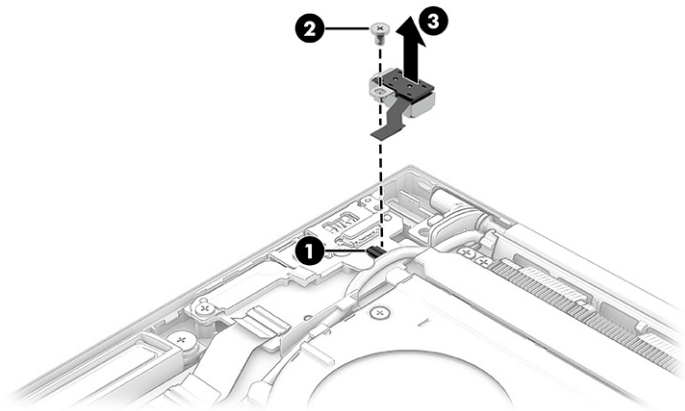

Reverse this procedure to install the audio jack.

Connector board cable

To remove the connector board cable, use this procedure and illustration.

NOTE: The connector board cable is included in the Cable Kit, spare part number N09040-001.

Before removing the connector board cable, follow these steps:

1. Prepare the computer for disassembly (see Preparation for disassembly on page 45).
2. Remove the bottom cover (see Bottom cover on page 45).
3. Disconnect the battery cable from the system board (see Battery on page 47).

Remove the connector board cable:

1. Release the ZIF connector **(1)** to which the connector board cable is connected, and then disconnect the cable from the system board.
2. Release the ZIF connector **(2)** to which the connector board cable is connected, and then disconnect the cable from the connector board.

3. Remove the connector board cable from the computer **(3)**.

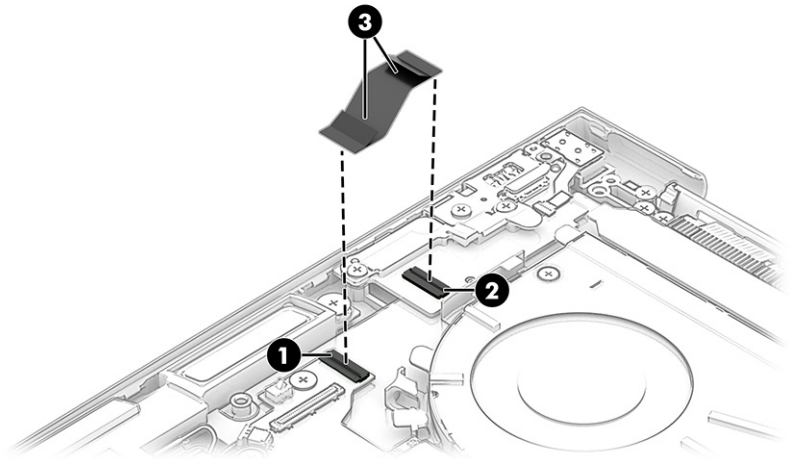

Reverse this procedure to install the connector board cable.

Connector board

To remove the connector board, use this procedure and illustration.

Table 5-9 **Connector board description and part number**

Description	Spare part number
Connector board (includes USB port and SIM card slot)	N09042-001
NOTE: The connector board spare part kit does not include the connector board cable. The connector board cable is included in the Cable Kit, spare part number N09040-001.	

Before removing the connector board, follow these steps:

1. Prepare the computer for disassembly (see Preparation for disassembly on page 45).
2. Remove the bottom cover (see Bottom cover on page 45).
3. Disconnect the battery cable from the system board (see Battery on page 47).
4. Remove the audio jack (see Audio jack on page 57).
5. Remove the connector board cable (see Connector board cable on page 58).

Remove the connector board:

1. Remove the three Phillips M2.0 × 2.5 screws **(1)** that secure the cable retainer and I/O bracket to the computer.
2. Remove the cable retainer **(2)** and I/O bracket **(3)** from the computer.

   The cable retainer and I/O bracket are included in the Bracket Kit, spare part number N09030-001.

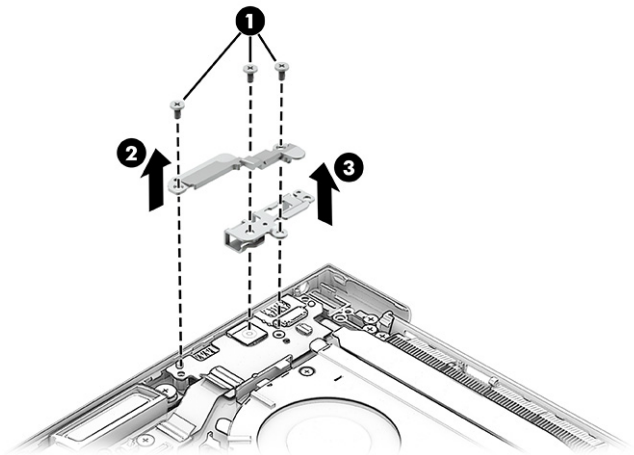

3. Remove the SIM card card blank insert **(1)** from the SIM card card slot.
4. Remove the connector board **(2)** from the computer.

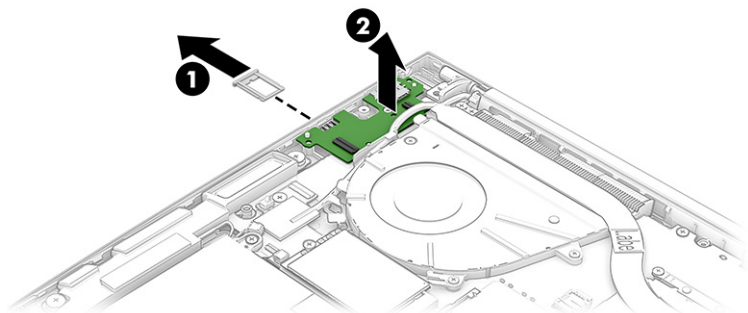

Reverse this procedure to install the connector board.

Fan

To remove the fan, use this procedure and illustration.

Table 5-10 **Fan description and part numbers**

Description	Spare part number
Fan (includes cable and captive screws):	
For use on computer models equipped with a 28 W processor	N09036-001
For use on computer models equipped with a 15 W processor	N09035-001

Before removing the fan, follow these steps:

1. Prepare the computer for disassembly (see Preparation for disassembly on page 45).
2. Remove the bottom cover (see Bottom cover on page 45).
3. Disconnect the battery cable from the system board (see Battery on page 47).

Remove the fan assembly:

1. Disconnect the fan cable **(1)** from the system board.
2. Release the webcam cable and WWAN module antenna cables from the retention clips **(2)** that are built into the fan.
3. Loosen the three Phillips captive screws **(3)** that secure the fan to the computer.
4. Remove the fan **(4)** from the computer.

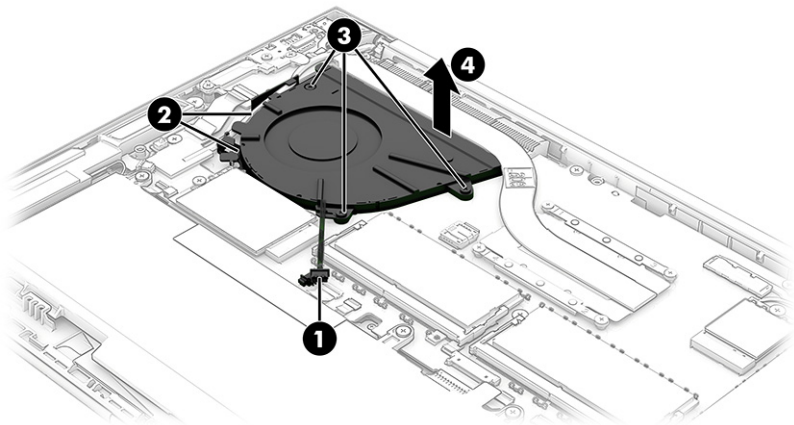

Reverse this procedure to install the fan assembly.

Display assembly

To remove and disassemble the display assembly, use these procedures and illustrations.

Before removing the display panel, follow these steps:

1. Prepare the computer for disassembly (see Preparation for disassembly on page 45).
2. Remove the bottom cover (see Bottom cover on page 45).
3. Disconnect the battery cable from the system board (see Battery on page 47).

Remove the display assembly:

1. Disconnect the webcam cable **(1)** from the system board.
2. Carefully disconnect the WWAN module antenna cables **(2)** from the WWAN module.

NOTE: Computer models have one to four WWAN module antenna cables. The antenna cables have tags that identify them with a number that corresponds to a terminal on the WWAN module. Connect the antenna cable to the corresponding WWAN module terminal.

3. Release the webcam cable and WWAN module antenna cables from the retention clips **(3)** that are built into the fan.

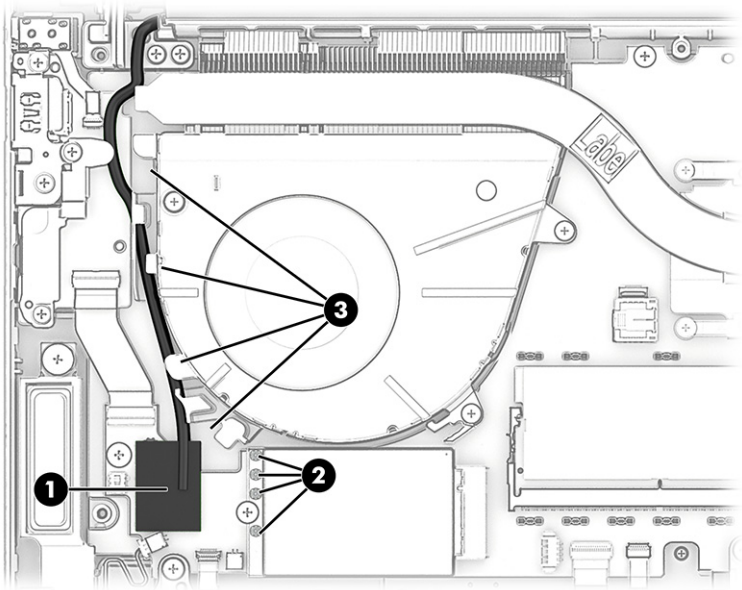

4. Disconnect the display panel cable **(1)** from the system board.

5. Carefully disconnect the WLAN module antenna cables from the WLAN module **(2)**.

NOTE: Computer models have either one or two WLAN module antennas. On models with two antennas, the #1 white WLAN module antenna cable connects to the WLAN module #1 Main terminal. The #2 black WLAN module antenna cable connects to the WLAN module #1 Aux terminal.

6. Release the display panel cable from the retention clips **(3)** that are built into the computer.

7. Release the WLAN module antenna cables from the retention clips **(4)** that are built into the computer.

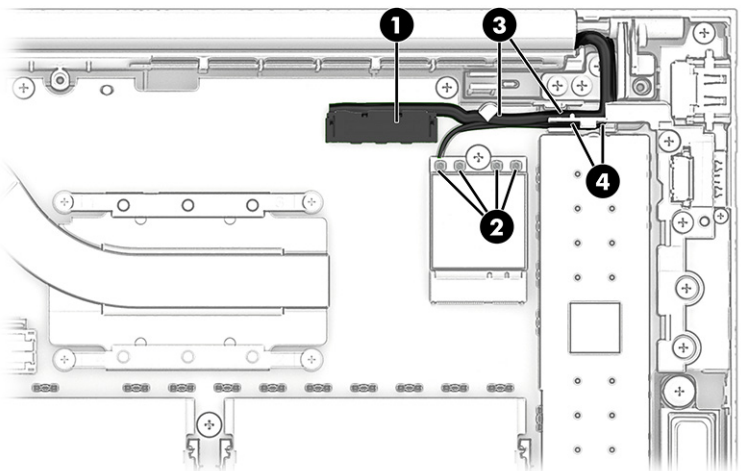

8. Remove the six Phillips M2.5 × 4.9 screws that secure the display assembly to the computer.

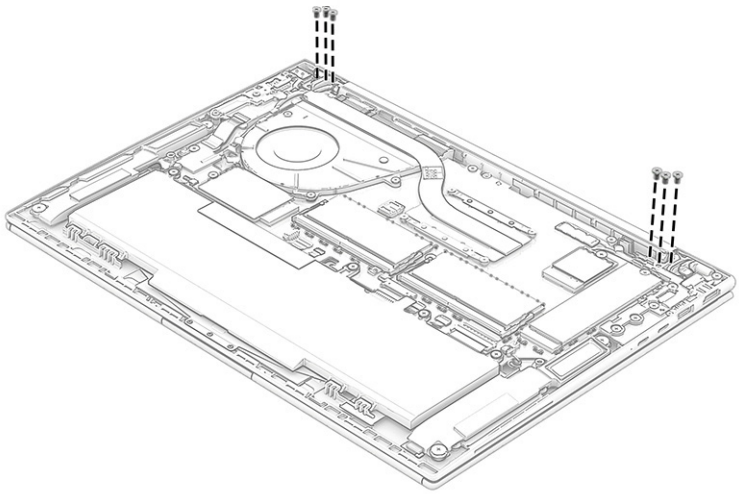

9. Swing the display hinges **(1)** up and back as far as they will go.
10. Open the display assembly **(2)** as far as it will open.
11. Separate the computer **(3)** from the display assembly.

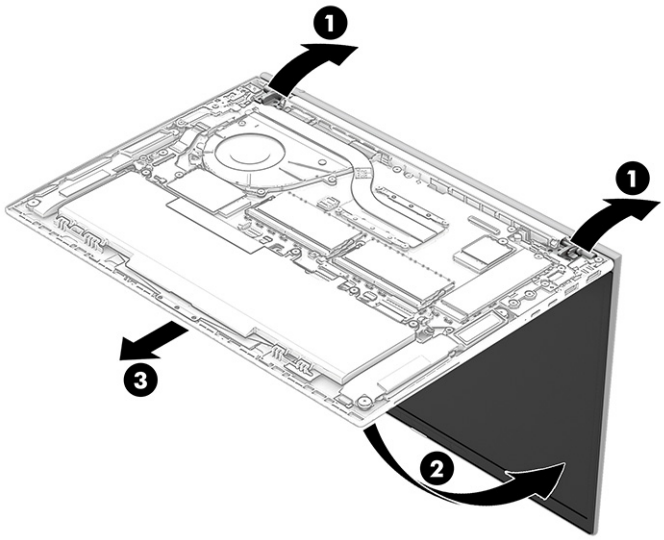

12. If you need to replace the display bezel or the internal display assembly subcomponents:
    a. Flex the bottom inside edge **(1)** of the bezel to release it from the display back cover.
    b. Flex the left **(2)** and right inside edges of the bezel to release it.
    c. Flex the top inside edge **(3)** of the bezel to release it.
    d. Remove the bezel **(4)** from the display back cover.

    The bezel is available using the following spare part numbers:

- N09021-001: For use on display assemblies equipped with infrared
- N09024-001: For use on display assemblies equipped with infrared and ACS
- N09023-001: For use on display assemblies equipped with a microphone
- N09022-001: For use on display assemblies equipped with RGB
- N09025-001: For use on display assemblies equipped with RGB and ACS

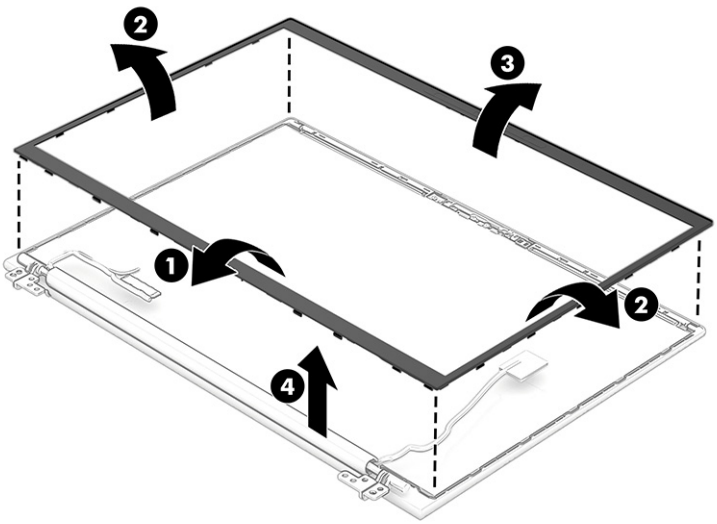

13. If you need to remove the display panel:
    a. Remove the display bezel.
    b. The display panel is secured to the display back cover with tape that is installed under the left **(1)** and right sides of the panel. To remove the panel, use tweezers to grasp the end of the tape **(2)**. While turning the tweezers, wrap the tape around the tweezers as you continue to pull the

tape out **(3)** from behind the display panel. You must pull the tape multiple times before it is completely removed.

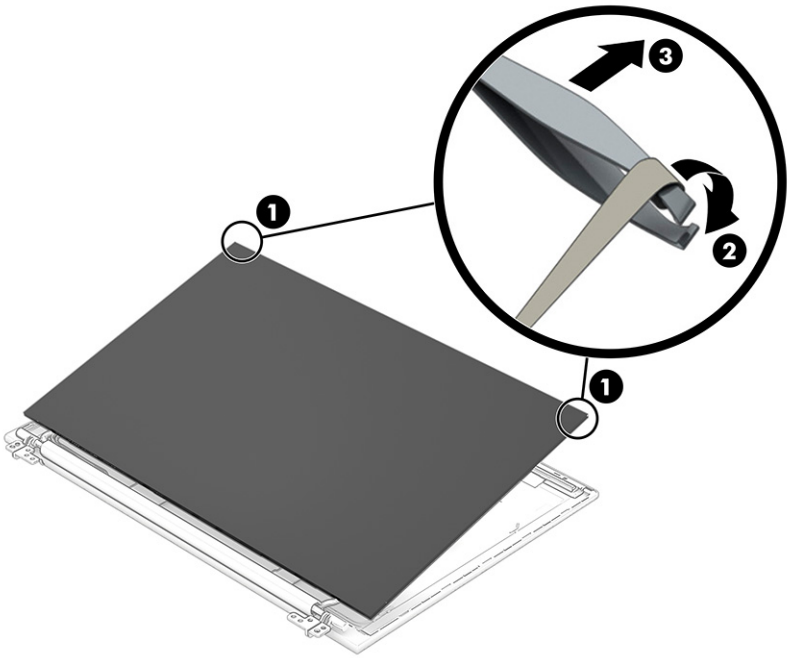

c. Lift the top edge of the display panel **(1)** and swing it up and forward until it rests upside down in front of the display back cover.

d. Release the adhesive support strip **(2)** that secures the display panel cable to the back of the display panel.

e. Release the retention bar **(3)** that secures the display panel cable to the back of the display panel.

f. Disconnect the display panel cable **(4)** from the display panel.

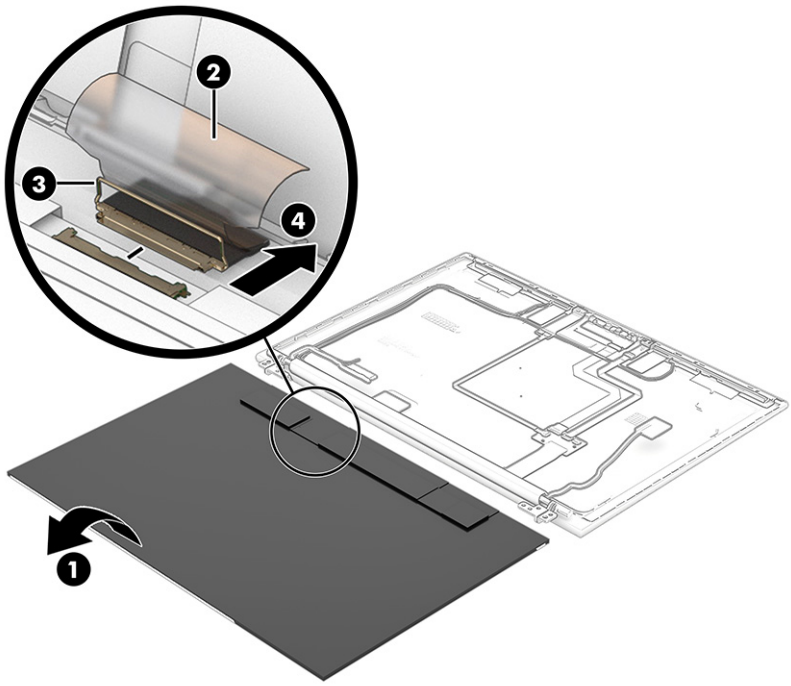

g. Remove the display panel.

The display panel is available using the following spare part numbers:

- N99947-005: 35.6 cm (14.0 in), LCD, WUXGA (1920 × 1200), antiglare, UWVA, LED, TOP bent display panel; typical brightness: 250 nits
- N99948-005: 35.6 cm (14.0 in), LCD, WUXGA (1920 × 1200), antiglare, UWVA, WLED + LBL, eDP 1.4 + PSR2, non-TOP bent display panel; typical brightness: 400 nits
- N99949-005: 35.6 cm (14.0 in), LCD, WUXGA (1920 × 1200), antiglare, UWVA, WLED + LBL, sRGB 100, eDP 1.3 + PSR, non-TOP bent display panel; typical brightness: 1000 nits
- N99946-005: 35.6 cm (14.0 in), LCD, WUXGA (1920 × 1200), antiglare, UWVA, WLED + LBL eDP, non-TOP bent display panel; typical brightness: 400 nits

14. If you need to remove the hinge cover:

a. Remove the display bezel.

b. Remove the display panel.

c. Remove the Phillips M1.3 × 2.5 screw **(1)** that secures the hinge cover to the display back cover.

d. Slide the hinge cover **(2)** to the right as far as it will go.

e. Swing the top edge of the hinge cover **(3)** up and forward, and then remove it **(4)** from the display back cover.

The hinge cover is available using spare part number tbd-001.

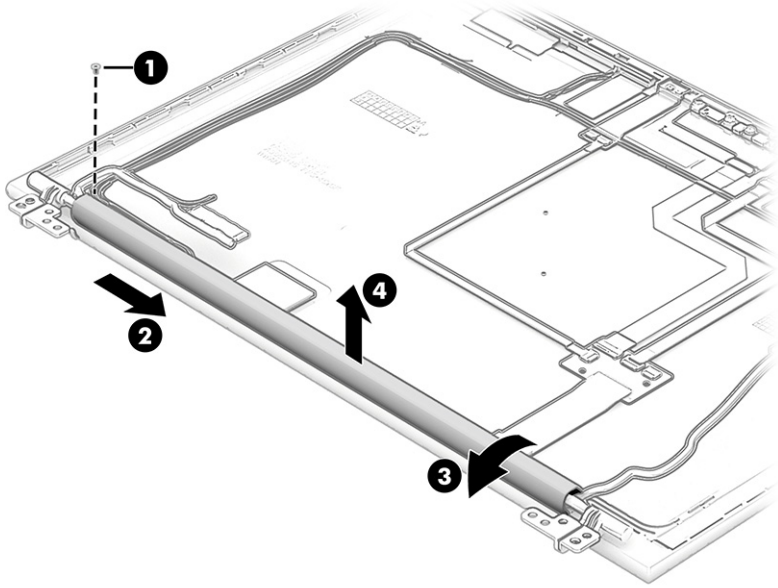

15. If you need to remove the display panel cable:
    a. Remove the display bezel.
    b. Remove the display panel.
    c. Remove the hinge cover.
    d. Release the display panel cable from the retention clips **(1)** that are built into the left hinge area.
    e. Remove the display panel cable **(2)**.

    The display panel cable is included in the Display Cable Kit, spare part number N09041-001.

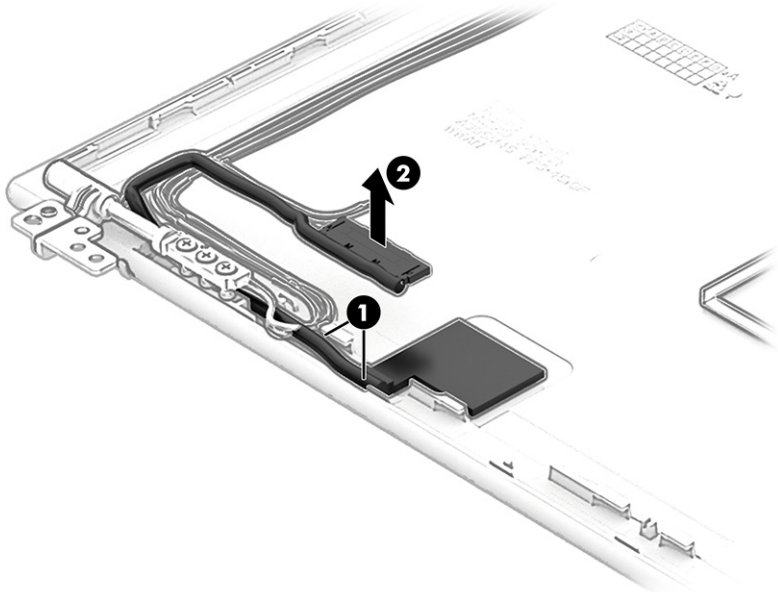

16. If you need to remove the hinges:
    a. Remove the display bezel.

b. Remove the display panel.

c. Remove the hinge cover.

d. Remove the six Phillips M2.5 × 10.5 screws **(1)** that secure the hinges to the display back cover.

e. Remove the hinges **(2)**.

The hinges are available using spare part number N09028-001.

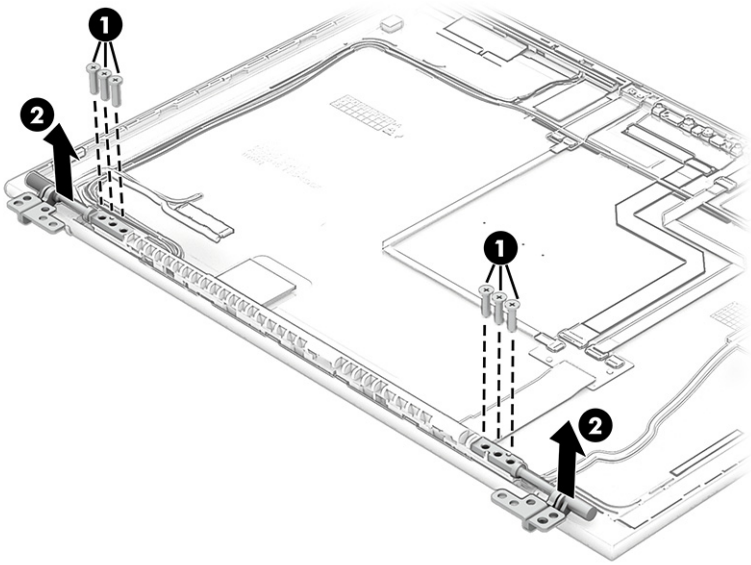

17. If you need to remove the display transfer board cable:

a. Remove the display bezel.

b. Remove the display panel.

c. Remove the hinge cover.

d. Disconnect the display transfer board cable **(1)** from the display transfer board.

e. Release the display transfer board cable from the right hinge area **(2)**.

f. Remove the display transfer board cable **(3)**.

The display transfer board cable is included in the Display Cable Kit, spare part number N09041-001.

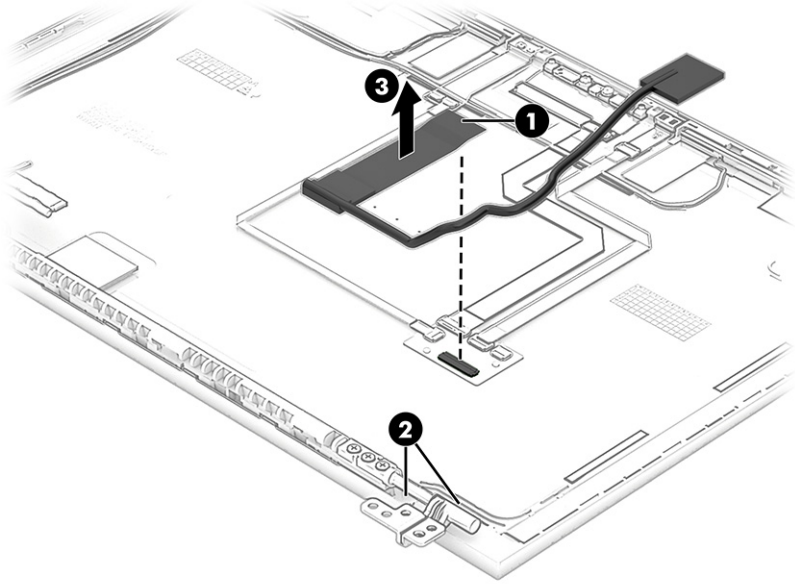

18. If you need to remove the display transfer board:
    a. Remove the display bezel.
    b. Remove the display panel.
    c. Remove the hinge cover.
    d. Remove the right hinge.
    e. Release the ZIF connector **(1)** to which the display transfer board cable is connected, and then disconnect the display transfer board cable from the display transfer board.
    f. Release the ZIF connector **(2)** to which the webcam module cable is connected, and then disconnect the webcam module cable from the display transfer board.
    g. Release the ZIF connector **(3)** to which the microphone module cable is connected, and then disconnect the microphone module cable from the display transfer board.

h. Detach the display transfer board **(4)** from the display back cover. (The display transfer board is attached to the display back cover with double-sided adhesive.)

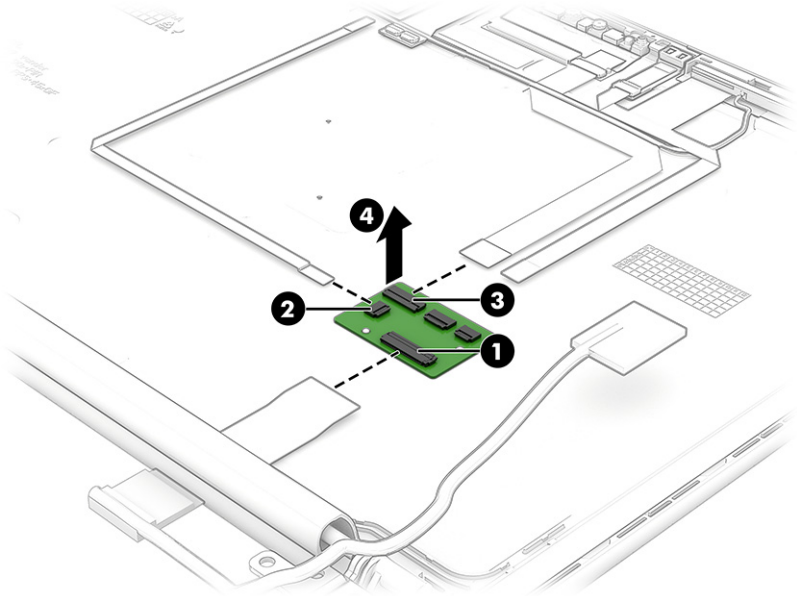

i. Remove the display transfer board.

The display transfer board is available using the following spare part numbers:

- N08540-001: For use on computer models equipped with a display assembly with ACS
- N08541-001: For use on computer models equipped with a display assembly with infrared
- N08542-001: For use on computer models equipped with a display assembly with RGB

19. If you need to remove the webcam module cable:

a. Remove the display bezel.

b. Remove the display panel.

c. Release the ZIF connector **(1)** to which the webcam module cable is connected, and then disconnect the webcam module cable from the display transfer board.

d. Release the ZIF connector **(2)** to which the webcam module cable is connected, and then disconnect the webcam module cable from the webcam module.

e. Detach the webcam module cable **(3)** from the display back cover. (The webcam module cable is attached to the display back cover with double-sided adhesive.)

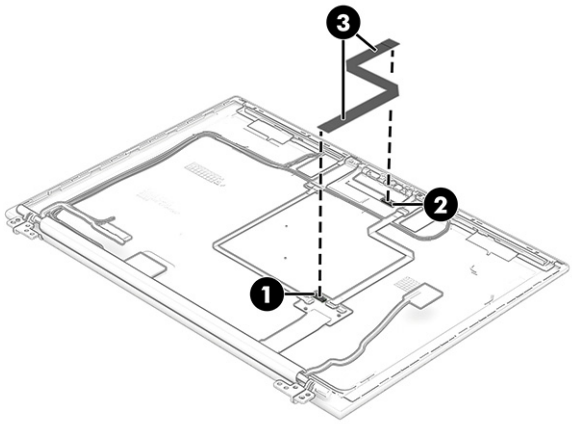

- Remove the webcam module cable.

  The webcam module cable is included in the Display Cable Kit, spare part number N09041-001.

20. If you need to remove the webcam module:

    a. Remove the display bezel.

    b. Remove the display panel.

    c. Remove the webcam module cable.

    d. Detach the webcam module from the display back cover. (The webcam module is attached to the display back cover with double-sided adhesive.)

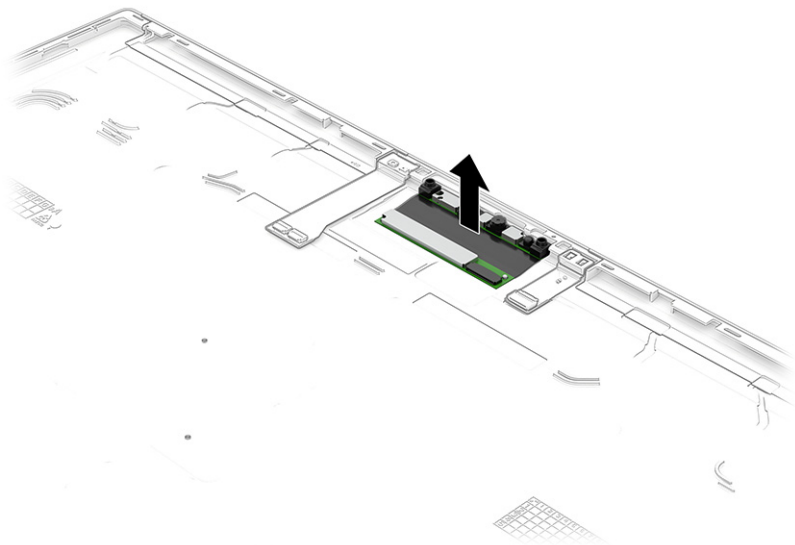

    e. Remove the webcam module.

    The webcam module is available using spare part numbers N09061-001 (infrared webcam) and N09060-001 (non-infrared webcam).

21. If you need to remove the microphone module cable:

a. Remove the display bezel.

b. Remove the display panel.

c. Release the ZIF connector **(1)** to which the microphone module cable is connected, and then disconnect the microphone module cable from the display transfer board.

d. Release the ZIF connector **(2)** to which the microphone module cable is connected, and then disconnect the microphone module cable from the microphone module.

e. Detach the microphone module cable **(3)** from the display back cover. (The microphone module cable is attached to the display back cover with double-sided adhesive.)

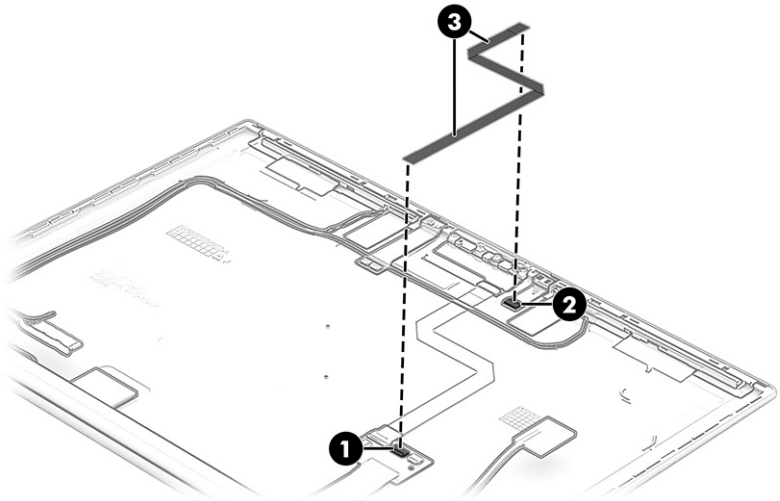

f. Remove the microphone module cable.

The microphone module cable is included in the Display Cable Kit, spare part number N09041-001.

22. If you need to remove the microphone module:

a. Remove the display bezel.

b. Remove the display panel.

c. Remove the microphone module cable.

d. Detach the microphone module from the display back cover. (The microphone module is attached to the display back cover with double-sided adhesive.)

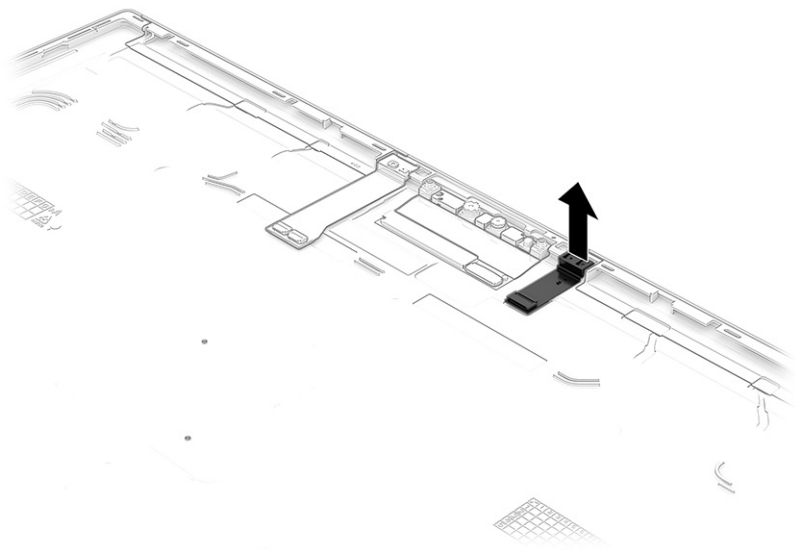

e. Remove the microphone module.

The microphone module is available using spare part number N15440-001.

Reverse this procedure to reassemble and replace the display assembly.

System board

To remove the system board, use these procedures and illustrations.

Table 5-11 **System board descriptions and part numbers**

Description	Spare part number
The system board spare part kit includes an integrated processor, an integrated graphics subsystem with UMA memory, and replacement thermal material.	
Equipped with an Intel Core i7-1280P 1.8 GHz (turbo up to 4.8 GHz) processor (14 cores, 24 MB Intel Smart Cache, 28 W), OSR, and the Windows 11 operating system	N09056-601
Equipped with an Intel Core i7-1280P 1.8 GHz (turbo up to 4.8 GHz) processor (14 cores, 24 MB Intel Smart Cache, 28 W), OSR, and a non-Windows operating system	N09056-001
Equipped with an Intel Core i7-1280P 1.8 GHz (turbo up to 4.8 GHz) processor (14 cores, 24 MB Intel Smart Cache, 28 W), and the Windows 11 operating system	N09055-601
Equipped with an Intel Core i7-1280P 1.8 GHz (turbo up to 4.8 GHz) processor (14 cores, 24 MB Intel Smart Cache, 28 W), and a non-Windows operating system	N09055-001
Equipped with an Intel Core i7-1270P 1.6 GHz (turbo up to 4.8 GHz) processor (12 cores, 18 MB Intel Smart Cache, 28 W), OSR, and the Windows 11 operating system	N09053-601
Equipped with an Intel Core i7-1270P 1.6 GHz (turbo up to 4.8 GHz) processor (12 cores, 18 MB Intel Smart Cache, 28 W), OSR, and a non-Windows operating system	N09053-001
Equipped with an Intel Core i7-1270P 1.6 GHz (turbo up to 4.8 GHz) processor (12 cores, 18 MB Intel Smart Cache, 28 W), and the Windows 11 operating system	N09052-601

Table 5-11 System board descriptions and part numbers (continued)

Description	Spare part number
Equipped with an Intel Core i7-1270P 1.6 GHz (turbo up to 4.8 GHz) processor (12 cores, 18 MB Intel Smart Cache, 28 W), and a non-Windows operating system	N09052-001
Equipped with an Intel Core i7-1265U 1.8 GHz (turbo up to 4.8 GHz) processor (10 cores, 12 MB Intel Smart Cache, 15 W), OSR, and the Windows 11 operating system	N09054-601
Equipped with an Intel Core i7-1265U 1.8 GHz (turbo up to 4.8 GHz) processor (10 cores, 12 MB Intel Smart Cache, 15 W), OSR, and a non-Windows operating system	N09054-001
Equipped with an Intel Core i7-1265U 1.8 GHz (turbo up to 4.8 GHz) processor (10 cores, 12 MB Intel Smart Cache, 15 W), and the Windows 11 operating system	N09051-601
Equipped with an Intel Core i7-1265U 1.8 GHz (turbo up to 4.8 GHz) processor (10 cores, 12 MB Intel Smart Cache, 15 W), and a non-Windows operating system	N09051-001
Equipped with an Intel Core i7-1260U 2.2 GHz (turbo up to 4.7 GHz) processor (12 cores, 18 MB Intel Smart Cache, 28 W), and the Windows 11 operating system	N09050-601
Equipped with an Intel Core i7-1260U 2.2 GHz (turbo up to 4.7 GHz) processor (12 cores, 18 MB Intel Smart Cache, 28 W), and a non-Windows operating system	N09050-001
Equipped with an Intel Core i7-1255U 1.7 GHz (turbo up to 4.7 GHz) processor (10 cores, 12 MB Intel Smart Cache, 15 W), and the Windows 11 operating system	N09049-601
Equipped with an Intel Core i7-1255U 1.7 GHz (turbo up to 4.7 GHz) processor (10 cores, 12 MB Intel Smart Cache, 15 W), and a non-Windows operating system	N09049-001
Equipped with an Intel Core i5-1250P 1.7 GHz (turbo up to 4.4 GHz) processor (12 cores, 18 MB Intel Smart Cache, 28 W), OSR, and the Windows 11 operating system	N09047-601
Equipped with an Intel Core i5-1250P 1.7 GHz (turbo up to 4.4 GHz) processor (12 cores, 18 MB Intel Smart Cache, 28 W), OSR, and a non-Windows operating system	N09047-001
Equipped with an Intel Core i5-1250P 1.7 GHz (turbo up to 4.4 GHz) processor (12 cores, 18 MB Intel Smart Cache, 28 W), and the Windows 11 operating system	N09046-601
Equipped with an Intel Core i5-1250P 1.7 GHz (turbo up to 4.4 GHz) processor (12 cores, 18 MB Intel Smart Cache, 28 W), and a non-Windows operating system	N09046-001
Equipped with an Intel Core i5-1245U 1.6 GHz (turbo up to 4.4 GHz) processor (10 cores, 12 MB Intel Smart Cache, 15 W), OSR, and the Windows 11 operating system	N09048-601
Equipped with an Intel Core i5-1245U 1.6 GHz (turbo up to 4.4 GHz) processor (10 cores, 12 MB Intel Smart Cache, 15 W), OSR, and a non-Windows operating system	N09048-001
Equipped with an Intel Core i5-1245U 1.6 GHz (turbo up to 4.4 GHz) processor (10 cores, 12 MB Intel Smart Cache, 15 W), and the Windows 11 operating system	N09045-601
Equipped with an Intel Core i5-1245U 1.6 GHz (turbo up to 4.4 GHz) processor (10 cores, 12 MB Intel Smart Cache, 15 W), and a non-Windows operating system	N09045-001
Equipped with an Intel Core i5-1240P 1.7 GHz (turbo up to 4.4 GHz) processor (12 cores, 12 MB Intel Smart Cache, 28 W), OSR, and the Windows 11 operating system	N09044-601
Equipped with an Intel Core i5-1240P 1.7 GHz (turbo up to 4.4 GHz) processor (12 cores, 12 MB Intel Smart Cache, 28 W), OSR, and a non-Windows operating system	N09044-001
Equipped with an Intel Core i5-1235U 1.3 GHz (turbo up to 4.4 GHz) processor (10 cores, 12 MB Intel Smart Cache, 15 W), and the Windows 11 operating system	N09270-601
Equipped with an Intel Core i5-1235U 1.3 GHz (turbo up to 4.4 GHz) processor (10 cores, 12 MB Intel Smart Cache, 15 W), and a non-Windows operating system	N09270-001

Before removing the system board, follow these steps:

1. Prepare the computer for disassembly (see Preparation for disassembly on page 45).
2. Remove the bottom cover (see Bottom cover on page 45).
3. Remove the battery (see Battery on page 47).
4. Remove the fan (see Fan on page 60).

When you replace the system board, be sure to remove the following components from the defective system board and install them on the replacement system board:

- WWAN module (see WWAN module on page 49).
- WLAN module (see WLAN module on page 50).
- Memory modules (see Memory module on page 53).
- Solid-state drive (see Solid-state drive on page 55).
- Heat sink (see Heat sink on page 77).
- RTC battery (see RTC battery on page 78).

Remove the system board:

1. Release the ZIF connector **(1)** to which the connector board cable is connected, and then disconnect the connector board cable from the system board.
2. Disconnect the webcam cable **(2)** from the system board.
3. Carefully disconnect the WWAN module antenna cables **(3)** from the WWAN module.

   NOTE: Computer models have one to four WWAN module antenna cables. The antenna cables have tags that identify them with a number that corresponds to a terminal on the WWAN module. Connect the antenna cable to the corresponding WWAN module terminal.

4. Disconnect the display panel cable **(4)** from the system board.
5. Release the display panel cable from the retention clips **(5)** that are built into the computer.
6. Carefully disconnect the WLAN module antenna cables **(6)** from the WLAN module.

   NOTE: Computer models have either one or two WLAN module antennas. On models with two antennas, the #1 white WLAN module antenna cable connects to the WLAN module #1 Main terminal. The #2 black WLAN module antenna cable connects to the WLAN module #1 Aux terminal.

7. Release the WLAN module antenna cables from the retention clips **(7)** that are built into the computer.
8. Disconnect the following cables from the system board:
   - Speaker cables **(8)**
   - Keyboard ZIF cable **(9)**
   - Card reader ZIF cable **(10)**
   - Touchpad ZIF cable **(11)**

- Backlight ZIF cable **(12)**
- NFC module ZIF cable **(13)**
- RTC battery cable **(14)**
- Fingerprint reader ZIF cable **(15)**

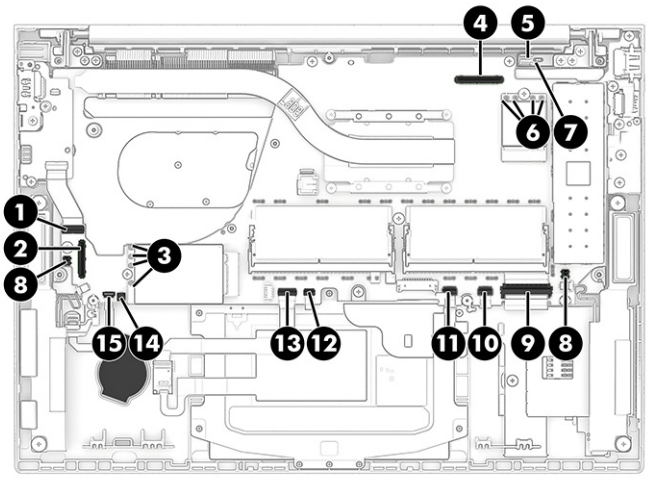

9. Remove the following screws that secure the system board and I/O bracket to the computer:
   - Two Phillips M2.0 × 2.5 broad head screws **(1)**
   - Three Phillips M2.0 × 4.5 screws **(2)**
   - One Phillips M2.0 × 4.4 screw **(3)**
   - Four Phillips M2.0 × 4.5 screws **(4)**
10. Remove the system board I/O bracket **(5)**.

    The system board I/O bracket is included in the Bracket Kit, spare part number N09030-001.

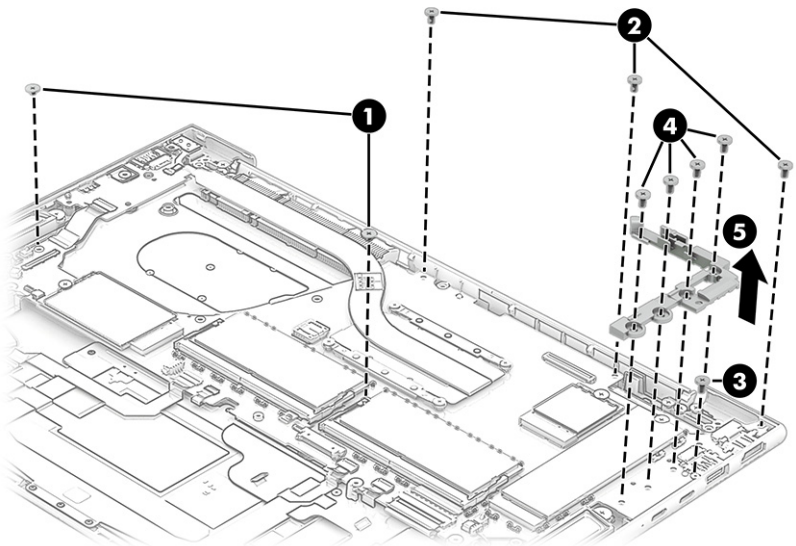

11. Lift the left side of the system board **(1)** until it rests at an angle.

12. Slide the system board **(2)** up and to the left at an angle to remove it.

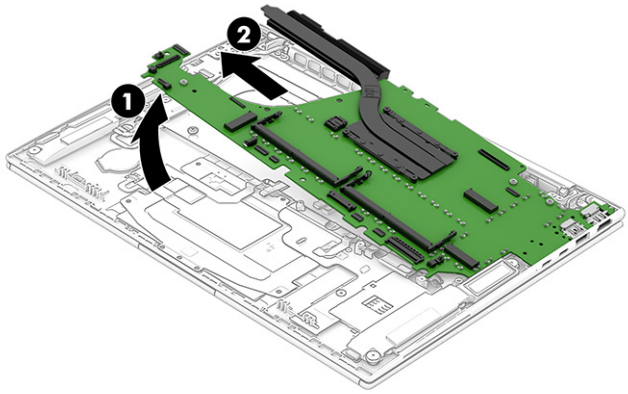

Reverse this procedure to install the system board.

Heat sink

To remove the heat sink, use these procedures and illustrations.

Table 5-12 **Heat sink descriptions and part numbers**

Description	Spare part number
Heat sink (includes captive screws and replacement thermal material)	
For use with computer models equipped with a 28 W processor	N07345-001
For use with computer models equipped with a 15 W processor	N07344-001

Before removing the heat sink, follow these steps:

1. Prepare the computer for disassembly (see Preparation for disassembly on page 45).
2. Remove the bottom cover (see Bottom cover on page 45).
3. Remove the battery (see Battery on page 47).
4. Remove the fan (see Fan on page 60).
5. Remove the system board (see System board on page 73).

Remove the heat sink:

1. In the order indicated on the heat sink, loosen the four Phillips captive screws **(1)** that secure the heat sink to the system board.

2. Remove the heat sink from the system board **(2)**.

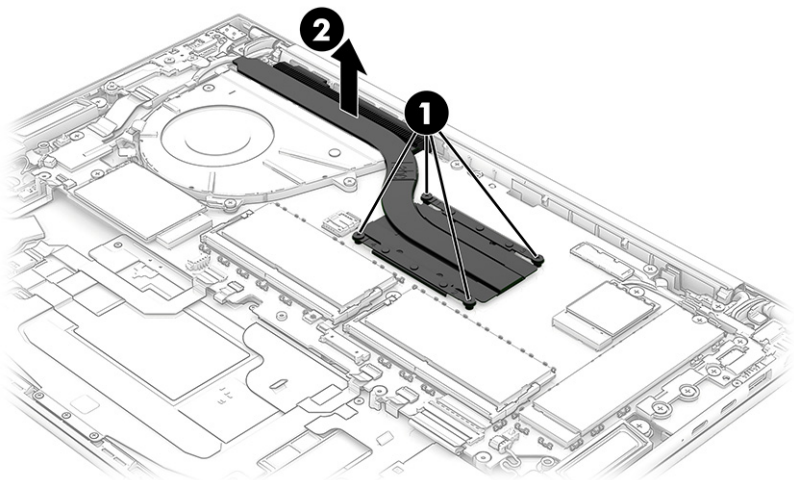

3. Thoroughly clean the thermal material from the surfaces of the heat sink and the system board components each time the heat sink is removed. Replacement thermal material is included with the heat sink and system board spare part kits. The following illustration shows the replacement thermal material locations.

   Thermal paste is used on the system board processor **(1)** and on the heat sink area **(2)** that service it.

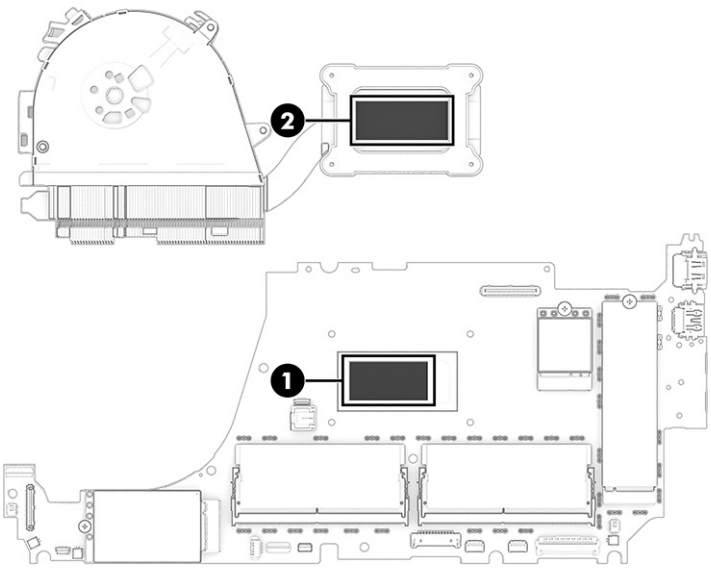

Reverse this procedure to install the heat sink.

Fingerprint reader

To remove the fingerprint reader, use this procedure and illustration.

Table 5-13 **Fingerprint reader description and part number**

Description	Spare part number
Fingerprint reader	N08532-001
NOTE: The fingerprint reader spare part kit does not include the fingerprint reader bracket or fingerprint reader cable. The fingerprint reader bracket is included in the Bracket Kit, spare part number N09030-001. The fingerprint reader cable is included in the Cable Kit, spare part number N09040-001.	

Before removing the fingerprint reader, follow these steps:

1. Prepare the computer for disassembly (see Preparation for disassembly on page 45).
2. Remove the bottom cover (see Bottom cover on page 45).
3. Remove the battery (see Battery on page 47).
4. Remove the right speaker (see Speakers on page 52).

Remove the fingerprint reader:

1. Remove the Phillips M2.0 × 2.5 broad head screw **(1)** that secures the fingerprint reader and bracket to the computer.
2. Remove the fingerprint reader bracket **(2)**.

   The fingerprint reader bracket is included in the Bracket Kit, spare part number N09030-001.
3. Release the ZIF connector **(3)** to which the fingerprint reader cable is connected, and then disconnect the fingerprint reader cable from the system board.
4. Detach the fingerprint reader cable **(4)** from the top cover/keyboard. (The fingerprint reader cable is attached to the top cover/keyboard with double-sided adhesive.)
5. Remove the fingerprint reader **(5)** and cable.

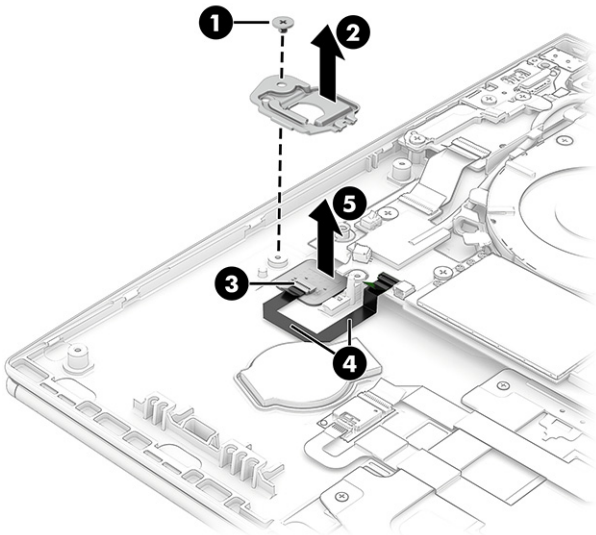

Reverse this procedure to install the fingerprint reader.

Fingerprint reader cable

To remove the fingerprint reader cable, use this procedure and illustration.

NOTE: The fingerprint reader cable is included in the Cable Kit, spare part number N09040-001.

Before removing the fingerprint reader cable, follow these steps:

1. Prepare the computer for disassembly (see Preparation for disassembly on page 45).
2. Remove the bottom cover (see Bottom cover on page 45).
3. Remove the battery (see Battery on page 47).
4. Remove the right speaker (see Speakers on page 52).
5. Remove the fingerprint reader (see Fingerprint reader on page 78).

Remove the fingerprint reader cable:

- Release the ZIF connector **(1)** to which the fingerprint reader cable is connected, and then disconnect the fingerprint reader cable **(2)** from the fingerprint reader.

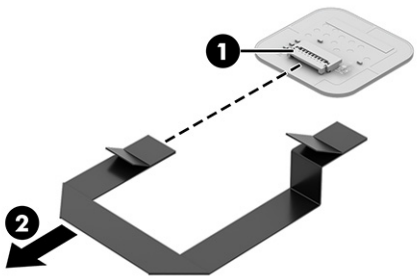

Reverse this procedure to install the fingerprint reader cable.

RTC battery

To remove the RTC battery, use this procedure and illustration.

Table 5-14 **RTC battery description and part number**

Description	Spare part number
RTC battery (includes cable and double-sided adhesive)	xxxxxx-001

Before removing the RTC battery, follow these steps:

1. Prepare the computer for disassembly (see Preparation for disassembly on page 45).
2. Remove the bottom cover (see Bottom cover on page 45).
3. Remove the battery (see Battery on page 47).

Remove the RTC battery:

1. Disconnect the RTC battery cable **(1)** from the system board.
2. Detach the RTC battery **(2)** from the top cover/keyboard. (The RTC battery is attached to the top cover/keyboard with double-sided adhesive.)

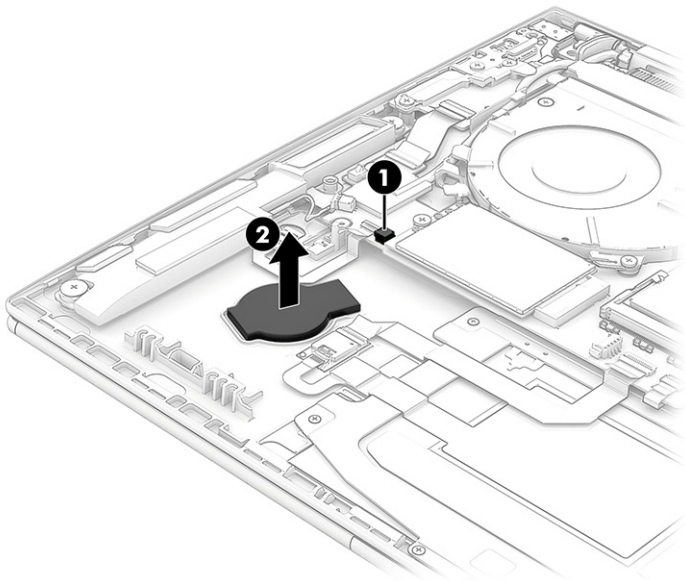

3. Remove the RTC battery.

Reverse this procedure to install the RTC battery.

NFC module cable

To remove the NFC module cable, use this procedure and illustration.

NOTE: The NFC module cable is included in the Cable Kit, spare part number N09040-001.

Before removing the NFC module cable, follow these steps:

1. Prepare the computer for disassembly (see Preparation for disassembly on page 45).
2. Remove the bottom cover (see Bottom cover on page 45).
3. Remove the battery (see Battery on page 47).

Remove the NFC module cable:

1. Release the ZIF connector **(1)** to which the NFC module cable is connected, and then disconnect the NFC module cable from the system board.
2. Release the ZIF connector **(2)** to which the NFC module cable is connected, and then disconnect the NFC module cable from the NFC module.

3. Detach the NFC module cable **(3)** from the top cover/keyboard. (The NFC module cable is attached to the top cover/keyboard with double-sided adhesive.)

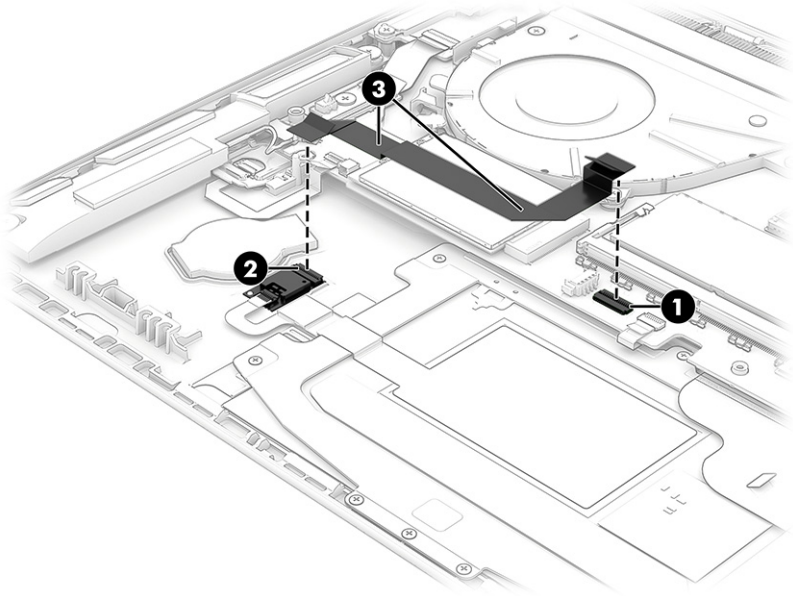

4. Remove the NFC module cable.

Reverse this procedure to install the NFC module cable.

NFC module

To remove the NFC module, use this procedure and illustration.

NOTE: The NFC module spare part kit includes xxxxxx.

Table 5-15 **NFC module description and part number**

Description	Spare part number
NFC module	M08706-001
NOTE: The NFC module spare part kit does not include the NFC module cable. The NFC module cable is included in the Cable Kit, spare part number N09040-001.	

Before removing the NFC module, follow these steps:

1. Prepare the computer for disassembly (see Preparation for disassembly on page 45).
2. Remove the bottom cover (see Bottom cover on page 45).
3. Remove the battery (see Battery on page 47).
4. Remove the NFC module cable (see NFC module cable on page 81).

Remove the NFC module:

1. Release the ZIF connector **(1)** to which the NFC module cable is connected, and then disconnect the NFC module cable from the NFC module.

2. Detach the NFC module **(2)** from the top cover/keyboard. (The NFC module is attached to the top cover/keyboard with double-sided adhesive.)

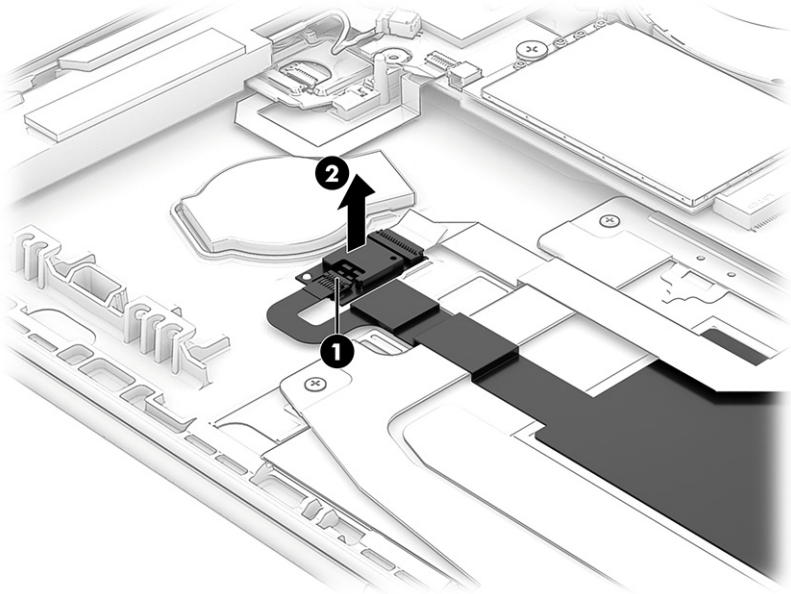

3. Remove the NFC module.

Reverse this procedure to install the NFC module.

Touchpad cable

To remove the touchpad cable, use this procedure and illustration.

NOTE: The touchpad cable is included in the Cable Kit, spare part number N09040-001.

Before removing the touchpad cable, follow these steps:

1. Prepare the computer for disassembly (see Preparation for disassembly on page 45).
2. Remove the bottom cover (see Bottom cover on page 45).
3. Remove the battery (see Battery on page 47).

Remove the touchpad cable:

1. Release the ZIF connector **(1)** to which the touchpad cable is connected, and then disconnect the touchpad cable from the system board.
2. Release the ZIF connector **(2)** to which the touchpad cable is connected, and then disconnect the touchpad cable from the touchpad.

3. Detach the touchpad cable **(3)** from the top cover/keyboard. (The touchpad cable is attached to the top cover/keyboard with double-sided adhesive.)

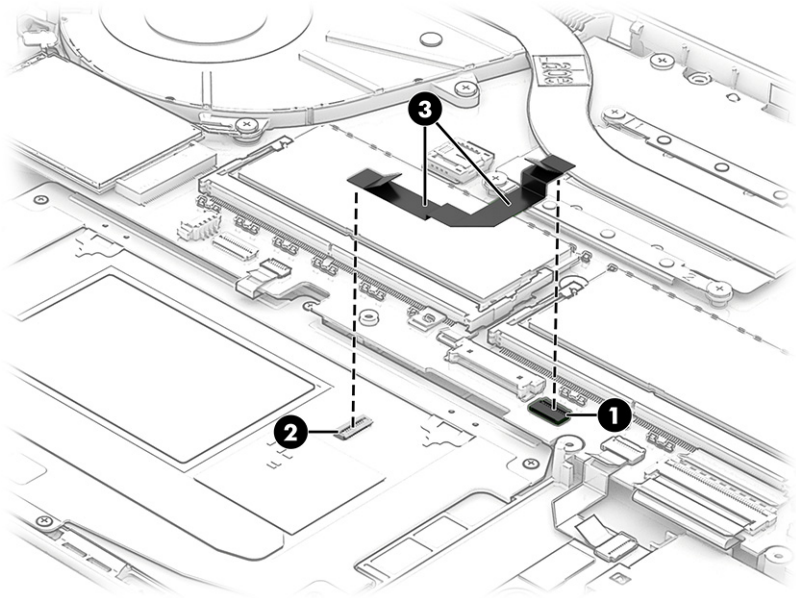

Reverse this procedure to install the touchpad cable.

Touchpad

To remove the touchpad, use this procedure and illustration.

NOTE: The touchpad spare part kit includes touchpad.

Table 5-16 **Touchpad descriptions and part numbers**

Description	Spare part number
Touchpad with NFC module antenna	N15436-001
Touchpad without NFC module antenna	N09033-001
NOTE: The touchpad spare part kit does not include the touchpad cable. The touchpad cable is included in the Cable Kit, spare part number N09040-001.	

Before removing the touchpad, follow these steps:

1. Prepare the computer for disassembly (see Preparation for disassembly on page 45).
2. Remove the bottom cover (see Bottom cover on page 45).
3. Remove the battery (see Battery on page 47).
4. Remove the touchpad cable (see Touchpad cable on page 83).

Remove the touchpad:

1. Release the ZIF connector **(1)** to which the NFC module cable is connected, and then disconnect the NFC module cable from the NFC module.

2. Detach the NFC module cable **(2)** from the top cover/keyboard. (The NFC module cable is attached to the top cover/keyboard with double-sided adhesive.)

3. Detach the backlight cable **(3)** from the touchpad. (The backlight cable is attached to the touchpad with double-sided adhesive.)

4. Remove the seven Phillips PM1.5 × 2.1 screws **(4)** that secure the touchpad to the computer.

5. Remove the touchpad **(5)**.

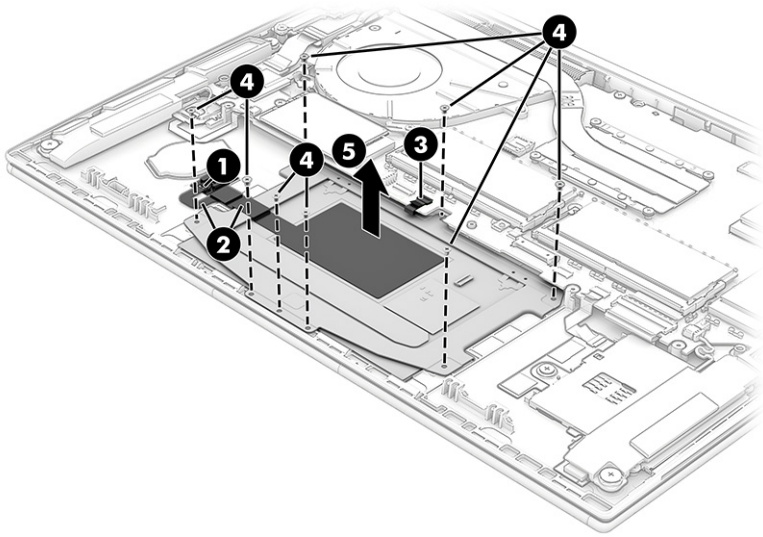

Reverse this procedure to install the touchpad.

Card reader cable

To remove the card reader cable, use this procedure and illustration.

NOTE: The card reader cable is included in the Cable Kit, spare part number N09040-001.

Before removing the card reader cable, follow these steps:

1. Prepare the computer for disassembly (see Preparation for disassembly on page 45).

2. Remove the bottom cover (see Bottom cover on page 45).

3. Remove the battery (see Battery on page 47).

Remove the card reader cable:

1. Release the ZIF connector **(1)** to which the card reader cable is connected, and then disconnect the card reader cable from the system board.

2. Release the ZIF connector **(2)** to which the card reader cable is connected, and then disconnect the card reader cable from the card reader.

3. Remove the card reader cable **(3)** from the computer **(3)**.

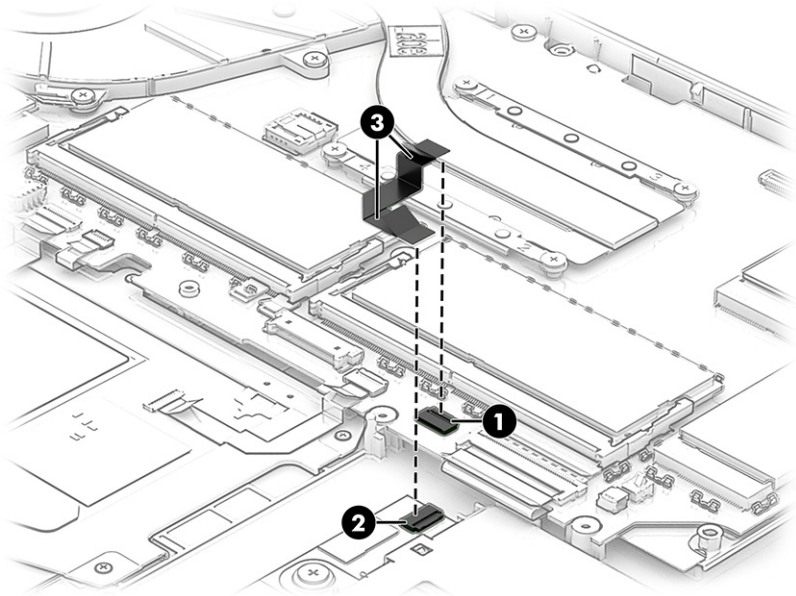

Reverse this procedure to install the card reader cable.

Card reader

To remove the card reader, use this procedure and illustration.

Table 5-17 **Card reader description and part number**

Description	Spare part number
Card reader	N02323-001
NOTE: The card reader spare part kit does not include the card reader cable. The card reader cable is included in the Cable Kit, spare part number N09040-001.	

Before removing the card reader, follow these steps:

1. Prepare the computer for disassembly (see Preparation for disassembly on page 45).
2. Remove the bottom cover (see Bottom cover on page 45).
3. Remove the battery (see Battery on page 47).
4. Remove the card reader cable (see Card reader cable on page 86).

Remove the card reader:

1. Remove the three Phillips M2.0 × 2.5 broad head screws **(1)** that secure the card reader to the computer.

2. Remove the card reader **(2)** from the computer.[cad edit-card reader cable should be removed]

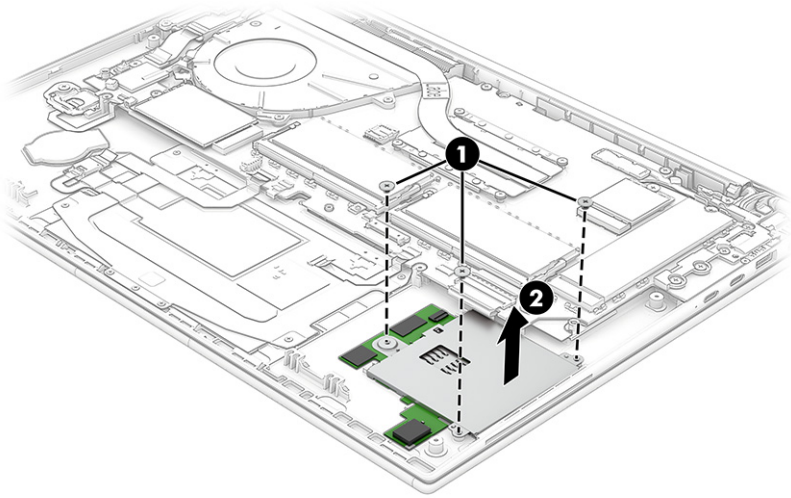

Reverse this procedure to install the card reader.

Keyboard with top cover

The top cover with keyboard remains after removing all other spare parts from the computer. In this section, the first table provides the main spare part number for the top cover/keyboards. The second table provides the country codes.

Table 5-18 **Keyboard with top cover descriptions and part numbers**

Description	Spare part number
Top cover/keyboard, backlit and spill-resistant with privacy filter	N09059-xxx
Top cover/keyboard, backlit and spill-resistant without privacy filter	N09058-xxx
Top cover/keyboard, spill-resistant without privacy filter	N09057-xxx

Table 5-19 **Spare part country codes**

For use in country or region	Spare part number	For use in country or region	Spare part number	For use in country or region	Spare part number
Belgium	-A41	Israel	-BB1	Slovenia	-BA1
Brazil	-201	Italy	-061	South Korea	-AD1
Bulgaria	-261	Japan	-291	Spain	-071
Czech Republic and Slovakia	-FL1	Kazakhstan	-DF1	Sweden and Finland	-B71
Denmark, Finland, and Norway	-DH1	Latin America	-161	Switzerland	-BG1
France	-051	The Netherlands	-B31	Taiwan	-AB1
French Canada	-DB1	Northern Africa	-FP1	Thailand	-281
Germany	-041	Norway	-091	Turkey	-141

Table 5-19 Spare part country codes (continued)

For use in country or region	Spare part number	For use in country or region	Spare part number	For use in country or region	Spare part number
Greece	-151	Portugal	-131	Turkey-F	-541
Hungary	-211	Romania	-271	Ukraine	-BD1
Iceland	-DD1	Russia	-251	United Kingdom	-031
India	-D61	Saudi Arabia	-171	United States	-001

6 Using Setup Utility (BIOS)

Setup Utility, or Basic Input/Output System (BIOS), controls communication between all the input and output devices on the system (such as disk drives, display, keyboard, mouse, and printer). Setup Utility (BIOS) includes settings for the types of devices installed, the startup sequence of the computer, and the amount of system and extended memory.

NOTE: To start Setup Utility on convertible computers, your computer must be in notebook mode and you must use the keyboard attached to your notebook.

Starting Setup Utility (BIOS)

You have several ways to access the Setup Utility (BIOS).

IMPORTANT: Use extreme care when making changes in Setup Utility (BIOS). Errors can prevent the computer from operating properly.

- Turn on or restart the computer and quickly press f10.

  – or –

  Turn on or restart the computer, quickly press esc, and then press f10 when the Start menu is displayed.

Updating Setup Utility (BIOS)

Updated versions of Setup Utility (BIOS) might be available on the HP website. Most BIOS updates on the HP website are packaged in compressed files called *SoftPaqs*. Some download packages contain a file named Readme.txt, which contains information regarding installing and troubleshooting the file.

Determining the BIOS version

To decide whether you need to update Setup Utility (BIOS), first determine the BIOS version on your computer.

To reveal the BIOS version information (also known as *ROM date* and *System BIOS*), use one of these options.

- HP Support Assistant

  1. Type `support` in the taskbar search box, and then select the **HP Support Assistant** app.

     – or –

Select the question mark icon in the taskbar.

2. Select **My notebook**, and then select **Specifications**.

- Setup Utility (BIOS)

  1. Start Setup Utility (BIOS) (see Starting Setup Utility (BIOS) on page 89).
  2. Select **Main**, and then make note of the BIOS version.
  3. Select **Exit**, select one of the options, and then follow the on-screen instructions.

- In Windows, press ctrl+alt+s.

To check for later BIOS versions, see Preparing for a BIOS update on page 90.

Preparing for a BIOS update

Be sure to follow all prerequisites before downloading and installing a BIOS update.

IMPORTANT: To reduce the risk of damage to the computer or an unsuccessful installation, download and install a BIOS update only when the computer is connected to reliable external power using the AC adapter. Do not download or install a BIOS update while the computer is running on battery power, docked in an optional docking device, or connected to an optional power source. During the download and installation, follow these instructions:

- Do not disconnect power from the computer by unplugging the power cord from the AC outlet.
- Do not shut down the computer or initiate Sleep.
- Do not insert, remove, connect, or disconnect any device, cable, or cord.

NOTE: If your computer is connected to a network, consult the network administrator before installing any software updates, especially system BIOS updates.

Downloading a BIOS update

After you review the prerequisites, you can check for and download BIOS updates.

1. Type `support` in the taskbar search box, and then select the **HP Support Assistant** app.

   – or –

   Select the question mark icon in the taskbar.

2. Select **Updates**, and then select **Check for updates and messages**.
3. Follow the on-screen instructions.
4. At the download area, follow these steps:

   a. Identify the most recent BIOS update and compare it to the BIOS version currently installed on your computer. If the update is more recent than your BIOS version, make a note of the date, name, or other identifier. You might need this information to locate the update later, after it has been downloaded to your hard drive.

   b. Follow the on-screen instructions to download your selection to the hard drive.

      Make a note of the path to the location on your hard drive where the BIOS update is downloaded. You will need to access this path when you are ready to install the update.

Installing a BIOS update

BIOS installation procedures vary. Follow any instructions that appear on the screen after the download is complete. If no instructions appear, follow these steps.

1. Type `file` in the taskbar search box, and then select **File Explorer**.
2. Select your hard drive designation. The hard drive designation is typically Local Disk (C:).
3. Using the hard drive path you recorded earlier, open the folder that contains the update.
4. Double-click the file that has an .exe extension (for example, *filename*.exe).

   The BIOS installation begins.
5. Complete the installation by following the on-screen instructions.

NOTE: After a message on the screen reports a successful installation, you can delete the downloaded file from your hard drive.

7 Computer Setup (BIOS), TPM, and HP Sure Start

HP provides several tools to help set up and protect your computer.

Using Computer Setup

Computer Setup, or Basic Input/Output System (BIOS), controls communication between all the input and output devices on the system (such as hard drives, display, keyboard, mouse, and printer). Computer Setup includes settings for types of devices installed, the startup sequence of the computer, and amount of system and extended memory.

NOTE: Use extreme care when making changes in Computer Setup. Errors can prevent the computer from operating properly.

To start Computer Setup, turn on or restart the computer, and when the HP logo appears, press f10 to enter Computer Setup.

Navigating and selecting in Computer Setup

You can navigate and select in Computer Setup using one or more methods.

- To select a menu or a menu item, use the tab key and the keyboard arrow keys and then press enter, or use a pointing device to select the item.
- To scroll up and down, select the up arrow or the down arrow in the upper-right corner of the screen, or use the up arrow key or the down arrow key on the keyboard.
- To close open dialog boxes and return to the main Computer Setup screen, press esc, and then follow the on-screen instructions.

To exit Computer Setup, choose one of the following methods:

- To exit Computer Setup menus without saving your changes, select **Main**, select **Ignore Changes and Exit**, and then select **Yes**.

  NOTE: If you are using arrow keys to highlight your choice, you must then press enter.

- To save your changes and exit Computer Setup menus, select **Main**, select **Save Changes and Exit**, and then select **Yes**.

  NOTE: If you are using arrow keys to highlight your choice, you must then press enter.

Your changes go into effect when the computer restarts.

Restoring factory settings in Computer Setup

To return all settings in Computer Setup to the values that were set at the factory, follow these steps.

NOTE: Restoring defaults will not change the hard drive mode.

1. Start Computer Setup. See Using Computer Setup on page 92.
2. Select **Main**, select **Apply Factory Defaults and Exit**, and then select **Yes**.

   NOTE: If you are using arrow keys to highlight your choice, you must then press enter.

   NOTE: On select products, the selections might display **Restore Defaults** instead of **Apply Factory Defaults and Exit**.

Your changes go into effect when the computer restarts.

NOTE: Your password settings and security settings are not changed when you restore the factory settings.

Updating the BIOS

Updated versions of the BIOS might be available on the HP website. Most BIOS updates on the HP website are packaged in compressed files called *SoftPaqs*.

Some download packages contain a file named Readme.txt, which contains information regarding installing and troubleshooting the file.

Determining the BIOS version

To decide whether you need to update Computer Setup (BIOS), first determine the BIOS version on your computer.

You can access BIOS version information (also known as *ROM date* and *System BIOS*) by pressing fn+esc (if you are already in Windows) or by using Computer Setup.

1. Start Computer Setup. See Using Computer Setup on page 92.
2. Select **Main**, and then select **System Information**.
3. To exit Computer Setup menus without saving your changes, select **Main**, select **Ignore Changes and Exit**, and then select **Yes**.

   NOTE: If you are using arrow keys to highlight your choice, you must then press enter.

To check for later BIOS versions, see Preparing for a BIOS update on page 93.

Preparing for a BIOS update

Be sure to follow all prerequisites before downloading and installing a BIOS update.

IMPORTANT: To reduce the risk of damage to the computer or an unsuccessful installation, download and install a BIOS update only when the computer is connected to reliable external power using the AC adapter. Do not download or install a BIOS update while the computer is running on battery power, docked in an optional docking device, or connected to an optional power source. During the download and installation, follow these instructions:

Do not disconnect power on the computer by unplugging the power cord from the AC outlet.

Do not shut down the computer or initiate Sleep.

Do not insert, remove, connect, or disconnect any device, cable, or cord.

Downloading a BIOS update

After you review the prerequisites, you can check for and download BIOS updates.

1. Type `support` in the taskbar search box, and then select the HP Support Assistant app.

   – or –

   Select the question mark icon in the taskbar.

2. Select **Updates**, and then select **Check for updates and messages**.
3. Follow the on-screen instructions.
4. At the download area, follow these steps:

   a. Identify the most recent BIOS update and compare it to the BIOS version currently installed on your computer. Make a note of the date, name, or other identifier. You might need this information to locate the update later, after it has been downloaded to your hard drive.

   b. Follow the on-screen instructions to download your selection to the hard drive.

      Make a note of the path to the location on your hard drive where the BIOS update is downloaded. You will need to access this path when you are ready to install the update.

NOTE: If you connect your computer to a network, consult the network administrator before installing any software updates, especially system BIOS updates.

Installing a BIOS update

BIOS installation procedures vary. Follow any instructions that are displayed on the screen after the download is complete. If no instructions are displayed, follow these steps.

1. Type `file` in the taskbar search box, and then select **File Explorer**.
2. Select your hard drive designation. The hard drive designation is typically Local Disk (C:).
3. Using the hard drive path you recorded earlier, open the folder that contains the update.
4. Double-click the file that has an .exe extension (for example, *filename*.exe).

   The BIOS installation begins.

5. Complete the installation by following the on-screen instructions.

NOTE: After a message on the screen reports a successful installation, you can delete the downloaded file from your hard drive.

Changing the boot order using the f9 prompt

To dynamically choose a boot device for the current startup sequence, follow these steps.

1. Access the Boot Device Options menu:
   - Turn on or restart the computer, and when the HP logo appears, press f9 to enter the Boot Device Options menu.
2. Select a boot device, press enter, and then follow the on-screen instructions.

TPM BIOS settings (select products only)

TPM provides additional security for your computer. You can modify the TPM settings in Computer Setup (BIOS).

IMPORTANT: Before enabling Trusted Platform Module (TPM) functionality on this system, you must ensure that your intended use of TPM complies with relevant local laws, regulations and policies, and approvals or licenses must be obtained if applicable. For any compliance issues arising from your operation or usage of TPM that violates the previously mentioned requirement, you shall bear all the liabilities wholly and solely. HP will not be responsible for any related liabilities.

NOTE: If you change the TPM setting to Hidden, TPM is not visible in the operating system.

To access TPM settings in Computer Setup:

1. Start Computer Setup. See Using Computer Setup on page 92.
2. Select **Security**, select **TPM Embedded Security**, and then follow the on-screen instructions.

Using HP Sure Start (select products only)

Select computer models are configured with HP Sure Start, a technology that monitors the computer's BIOS for attacks or corruption. If the BIOS becomes corrupted or is attacked, HP Sure Start automatically restores the BIOS to its previously safe state, without user intervention.

HP Sure Start is configured and already enabled so that most users can use the HP Sure Start default configuration. Advanced users can customize the default configuration.

To access the latest documentation on HP Sure Start, go to http://www.hp.com/support. Select **Find your product**, and then follow the on-screen instructions.

8 Backing up, restoring, and recovering

You can use Windows tools or HP software to back up your information, create a restore point, reset your computer, create recovery media, or restore your computer to its factory state. Performing these standard procedures can return your computer to a working state faster.

IMPORTANT: If you will be performing recovery procedures on a tablet, the tablet battery must be at least 70% charged before you start the recovery process.

IMPORTANT: For a tablet with a detachable keyboard, connect the tablet to the keyboard base before beginning any recovery process.

Backing up information and creating recovery media

These methods of creating recovery media and backups are available on select products only.

Using Windows tools for backing up

HP recommends that you back up your information immediately after initial setup. You can do this task either using Windows Backup locally with an external USB drive or using online tools.

IMPORTANT: Windows is the only option that allows you to back up your personal information. Schedule regular backups to avoid information loss.

NOTE: If computer storage is 32 GB or less, Microsoft® System Restore is disabled by default.

Using the HP Cloud Recovery Download Tool to create recovery media (select products only)

You can use the HP Cloud Recovery Download Tool to create HP Recovery media on a bootable USB flash drive.

For details:

- Go to http://www.hp.com, search for HP Cloud Recovery, and then select the result that matches the type of computer that you have.

NOTE: If you cannot create recovery media yourself, contact support to obtain recovery discs. Go to http://www.hp.com/support, select your country or region, and then follow the on-screen instructions.

IMPORTANT: HP recommends that you follow the Restoring and recovery methods on page 97 to restore your computer before you obtain and use the HP recovery discs. Using a recent backup can return your machine to a working state sooner than using the HP recovery discs. After the system is

restored, reinstalling all the operating system software released since your initial purchase can be a lengthy process.

Restoring and recovering your system

You have several tools available to recover your system both within and outside of Windows if the desktop cannot load.

HP recommends that you attempt to restore your system using the Restoring and recovery methods on page 97.

Creating a system restore

System Restore is available in Windows. The System Restore software can automatically or manually create restore points, or snapshots, of the system files and settings on the computer at a particular point.

When you use System Restore, it returns your computer to its state at the time you made the restore point. Your personal files and documents should not be affected.

Restoring and recovery methods

After you run the first method, test to see whether the issue still exists before you proceed to the next method, which might now be unnecessary.

1. Run a Microsoft System Restore.
2. Run Reset this PC.

   NOTE: The options **Remove everything** and then **Fully clean the drive** can take several hours to complete and leave no information on your computer. It is the safest way to reset your computer before you recycle it.

3. Recover using HP Recovery media. For more information, see Recovering using HP Recovery media on page 97.

For more information about the first two methods, see the Get Help app:

Select the **Start** button, select the **Get Help** app, and then enter the task you want to perform.

NOTE: You must be connected to the internet to access the Get Help app.

Recovering using HP Recovery media

You can use HP Recovery media to recover the original operating system and software programs that were installed at the factory. On select products, it can be created on a bootable USB flash drive using the HP Cloud Recovery Download Tool.

For details, see Using the HP Cloud Recovery Download Tool to create recovery media (select products only) on page 96.

NOTE: If you cannot create recovery media yourself, contact support to obtain recovery discs. Go to http://www.hp.com/support, select your country or region, and then follow the on-screen instructions.

To recover your system:

- Insert the HP Recovery media, and then restart the computer.

NOTE: HP recommends that you follow the Restoring and recovery methods on page 97 to restore your computer before you obtain and use the HP recovery discs. Using a recent backup can return your machine to a working state sooner than using the HP recovery discs. After the system is restored, reinstalling all the operating system software released since your initial purchase can be a lengthy process.

Changing the computer boot order

If your computer does not restart using the HP Recovery media, you can change the computer boot order, the order of devices listed in BIOS for startup information. You can select an optical drive or a USB flash drive, depending on the location of your HP Recovery media.

IMPORTANT: For a tablet with a detachable keyboard, connect the tablet to the keyboard base before beginning these steps.

To change the boot order:

1. Insert the HP Recovery media.
2. Access the system **Startup** menu.
   - For computers or tablets with keyboards attached, turn on or restart the computer or tablet, quickly press esc, and then press f9 for boot options.
   - For tablets without keyboards, turn on or restart the tablet, quickly press and hold the volume up button, and then select **f9**.

     – or –

     Turn on or restart the tablet, quickly press and hold the volume down button, and then select **f9**.
3. Select the optical drive or USB flash drive from which you want to boot, and then follow the on-screen instructions.

Using HP Sure Recover (select products only)

Select computer models are configured with HP Sure Recover, a PC operating system (OS) recovery solution built into the hardware and software. HP Sure Recover can fully restore the HP OS image without installed recovery software.

Using HP Sure Recover, an administrator or user can restore the system and install:

- Latest version of the operating system
- Platform-specific device drivers
- Software applications, in the case of a custom image

To access the latest documentation for HP Sure Recover, go to http://www.hp.com/support. Follow the on-screen instructions to find your product and locate your documentation.

9 Using HP PC Hardware Diagnostics

You can use the HP PC Hardware Diagnostics utility to determine whether your computer hardware is running properly. The three versions are HP PC Hardware Diagnostics Windows, HP PC Hardware Diagnostics UEFI (Unified Extensible Firmware Interface), and (for select products only) Remote HP PC Hardware Diagnostics UEFI, a firmware feature.

Using HP PC Hardware Diagnostics Windows (select products only)

HP PC Hardware Diagnostics Windows is a Windows-based utility that allows you to run diagnostic tests to determine whether the computer hardware is functioning properly. The tool runs within the Windows operating system to diagnose hardware failures.

If HP PC Hardware Diagnostics Windows is not installed on your computer, first you must download and install it. To download HP PC Hardware Diagnostics Windows, see Downloading HP PC Hardware Diagnostics Windows on page 100.

Using an HP PC Hardware Diagnostics Windows hardware failure ID code

When HP PC Hardware Diagnostics Windows detects a failure that requires hardware replacement, a 24-digit failure ID code is generated for select component tests. For interactive tests, such as keyboard, mouse, or audio and video palette, you must perform troubleshooting steps before you can receive a failure ID.

- You have several options after you receive a failure ID:
  - Select **Next** to open the Event Automation Service (EAS) page, where you can log the case.

    – or –
  - Scan the QR code with your mobile device, which takes you to the EAS page, where you can log the case.

    – or –
  - Select the box next to the 24-digit failure ID to copy your failure code and send it to support.

Accessing HP PC Hardware Diagnostics Windows

After HP PC Hardware Diagnostics Windows is installed, you can access it from HP Support Assistant or the Start menu.

Accessing HP PC Hardware Diagnostics Windows from HP Help and Support (select products only)

After HP PC Hardware Diagnostics Windows is installed, follow these steps to access it from HP Help and Support.

1. Select the **Start** button, and then select **HP Help and Support**.
2. Select **HP PC Hardware Diagnostics Windows**.
3. When the tool opens, select the type of diagnostic test that you want to run, and then follow the on-screen instructions.

NOTE: To stop a diagnostic test, select **Cancel**.

Accessing HP PC Hardware Diagnostics Windows from Support Assistant

After HP PC Hardware Diagnostics Windows is installed, follow these steps to access it from HP Support Assistant.

1. Type `support` in the taskbar search box, and then select the **HP Support Assistant** app.

   – or –

   Select the question mark icon in the taskbar.
2. Select **Troubleshooting and fixes**.
3. Select **Diagnostics**, and then select **HP PC Hardware Diagnostics Windows**.
4. When the tool opens, select the type of diagnostic test that you want to run, and then follow the on-screen instructions.

NOTE: To stop a diagnostic test, select **Cancel**.

Accessing HP PC Hardware Diagnostics Windows from the Start menu (select products only)

After HP PC Hardware Diagnostics Windows is installed, follow these steps to access it from the Start menu.

1. Select the **Start** button.
2. Right-click **HP PC Hardware Diagnostics for Windows**, select **More**, and then select **Run as administrator**.
3. When the tool opens, select the type of diagnostic test that you want to run, and then follow the on-screen instructions.

NOTE: To stop a diagnostic test, select **Cancel**.

Downloading HP PC Hardware Diagnostics Windows

The HP PC Hardware Diagnostics Windows downloading instructions are provided in English only. You must use a Windows computer to download this tool because only .exe files are provided.

Downloading the latest HP PC Hardware Diagnostics Windows version from HP

To download HP PC Hardware Diagnostics Windows from HP, follow these steps.

1. Go to http://www.hp.com/go/techcenter/pcdiags. The HP PC Diagnostics home page is displayed.
2. Select **Download HP Diagnostics Windows**, and then select the specific Windows diagnostics version to download to your computer or a USB flash drive.

The tool downloads to the selected location.

Downloading the HP PC Hardware Diagnostics Windows from the Microsoft Store

You can download the HP PC Hardware Diagnostics Windows from the Microsoft Store.

1. Select the Microsoft Store app on your desktop or enter `Microsoft Store` in the taskbar search box.
2. Enter `HP PC Hardware Diagnostics Windows` in the **Microsoft Store** search box.
3. Follow the on-screen directions.

The tool downloads to the selected location.

Downloading HP Hardware Diagnostics Windows by product name or number (select products only)

You can download HP PC Hardware Diagnostics Windows by product name or number.

NOTE: For some products, you might have to download the software to a USB flash drive by using the product name or number.

1. Go to http://www.hp.com/support.
2. Select **Software and Drivers**, select your type of product, and then enter the product name or number in the search box that is displayed.
3. In the **Diagnostics** section, select **Download**, and then follow the on-screen instructions to select the specific Windows diagnostics version to be downloaded to your computer or USB flash drive.

The tool downloads to the selected location.

Installing HP PC Hardware Diagnostics Windows

To install HP PC Hardware Diagnostics Windows, navigate to the folder on your computer or the USB flash drive where the .exe file downloaded, double-click the .exe file, and then follow the on-screen instructions.

Using HP PC Hardware Diagnostics UEFI

HP PC Hardware Diagnostics UEFI (Unified Extensible Firmware Interface) allows you to run diagnostic tests to determine whether the computer hardware is functioning properly. The tool runs outside the operating system so that it can isolate hardware failures from issues that are caused by the operating system or other software components.

NOTE: For Windows 10 S computers, you must use a Windows computer and a USB flash drive to download and create the HP UEFI support environment because only .exe files are provided. For more information, see Downloading HP PC Hardware Diagnostics UEFI to a USB flash drive on page 102.

If your PC does not start in Windows, you can use HP PC Hardware Diagnostics UEFI to diagnose hardware issues.

Using an HP PC Hardware Diagnostics UEFI hardware failure ID code

When HP PC Hardware Diagnostics UEFI detects a failure that requires hardware replacement, a 24-digit failure ID code is generated.

For assistance in solving the problem:

- Select **Contact HP**, accept the HP privacy disclaimer, and then use a mobile device to scan the failure ID code that appears on the next screen. The HP Customer Support - Service Center page appears with your failure ID and product number automatically filled in. Follow the on-screen instructions.

  – or –

  Contact support, and provide the failure ID code.

NOTE: To start diagnostics on a convertible computer, your computer must be in notebook mode, and you must use the attached keyboard.

NOTE: If you need to stop a diagnostic test, press esc.

Starting HP PC Hardware Diagnostics UEFI

To start HP PC Hardware Diagnostics UEFI, follow this procedure.

1. Turn on or restart the computer, and quickly press esc.
2. Press f2.

   The BIOS searches three places for the diagnostic tools, in the following order:

   a. Connected USB flash drive

   NOTE: To download the HP PC Hardware Diagnostics UEFI tool to a USB flash drive, see Downloading the latest HP PC Hardware Diagnostics UEFI version on page 103.

   b. Hard drive

   c. BIOS
3. When the diagnostic tool opens, select a language, select the type of diagnostic test you want to run, and then follow the on-screen instructions.

Downloading HP PC Hardware Diagnostics UEFI to a USB flash drive

Downloading HP PC Hardware Diagnostics UEFI to a USB flash drive can be useful in some situations.

- HP PC Hardware Diagnostics UEFI is not included in the preinstallation image.
- HP PC Hardware Diagnostics UEFI is not included in the HP Tool partition.
- The hard drive is damaged.

NOTE: The HP PC Hardware Diagnostics UEFI downloading instructions are provided in English only, and you must use a Windows computer to download and create the HP UEFI support environment because only .exe files are provided.

Downloading the latest HP PC Hardware Diagnostics UEFI version

To download the latest HP PC Hardware Diagnostics UEFI version to a USB flash drive, follow this procedure.

1. Go to http://www.hp.com/go/techcenter/pcdiags. The HP PC Diagnostics home page is displayed.
2. Select **Download HP Diagnostics UEFI**, and then select **Run**.

Downloading HP PC Hardware Diagnostics UEFI by product name or number (select products only)

You can download HP PC Hardware Diagnostics UEFI by product name or number (select products only) to a USB flash drive.

NOTE: For some products, you might have to download the software to a USB flash drive by using the product name or number.

1. Go to http://www.hp.com/support.
2. Enter the product name or number, select your computer, and then select your operating system.
3. In the **Diagnostics** section, follow the on-screen instructions to select and download the specific UEFI Diagnostics version for your computer.

Using Remote HP PC Hardware Diagnostics UEFI settings (select products only)

Remote HP PC Hardware Diagnostics UEFI is a firmware (BIOS) feature that downloads HP PC Hardware Diagnostics UEFI to your computer. It can then execute the diagnostics on your computer, and it might upload results to a preconfigured server.

For more information about Remote HP PC Hardware Diagnostics UEFI, go to http://www.hp.com/go/techcenter/pcdiags, and then select **Find out more**.

Downloading Remote HP PC Hardware Diagnostics UEFI

HP Remote PC Hardware Diagnostics UEFI is also available as a SoftPaq that you can download to a server.

Downloading the latest Remote HP PC Hardware Diagnostics UEFI version

You can download the latest HP PC Hardware Diagnostics UEFI version to a USB flash drive.

1. Go to http://www.hp.com/go/techcenter/pcdiags. The HP PC Diagnostics home page is displayed.
2. Select **Download Remote Diagnostics**, and then select **Run**.

Downloading Remote HP PC Hardware Diagnostics UEFI by product name or number

You can download HP Remote PC Hardware Diagnostics UEFI by product name or number.

NOTE: For some products, you might have to download the software by using the product name or number.

1. Go to http://www.hp.com/support.

2. Select **Software and Drivers**, select your type of product, enter the product name or number in the search box that is displayed, select your computer, and then select your operating system.

3. In the **Diagnostics** section, follow the on-screen instructions to select and download the **Remote UEFI** version for the product.

Customizing Remote HP PC Hardware Diagnostics UEFI settings

Using the Remote HP PC Hardware Diagnostics setting in Computer Setup (BIOS), you can perform several customizations.

- Set a schedule for running diagnostics unattended. You can also start diagnostics immediately in interactive mode by selecting **Execute Remote HP PC Hardware Diagnostics**.
- Set the location for downloading the diagnostic tools. This feature provides access to the tools from the HP website or from a server that has been preconfigured for use. Your computer does not require the traditional local storage (such as a hard drive or USB flash drive) to run remote diagnostics.
- Set a location for storing the test results. You can also set the user name and password that you use for uploads.
- Display status information about the diagnostics run previously.

To customize Remote HP PC Hardware Diagnostics UEFI settings, follow these steps:

1. Turn on or restart the computer, and when the HP logo appears, press f10 to enter Computer Setup.
2. Select **Advanced**, and then select **Settings**.
3. Make your customization selections.
4. Select **Main**, and then **Save Changes and Exit** to save your settings.

Your changes take effect when the computer restarts.

10 Specifications

This chapter provides specifications for your computer.

Computer specifications

This section provides specifications for your computer. When you travel with your computer, the computer dimensions and weights, as well as input power ratings and operating specifications, provide helpful information.

Table 10-1 **Computer specifications**

	Metric	U.S.
Dimensions		
Width	**315.6 mm**	12.43 in
Depth	**224.1 mm**	8.82 in
Height (front to back)	**19.2 mm**	0.76 in
Weight	**1.18 kg**	2.59 lb
Input power		
Operating voltage and current	19.5 V dc @ 2.31 A - 45 W	
	19.5 V dc @ 3.33 A - 65 W	
	19.5 V dc @ 4.62 A - 90 W	
	19.5 V dc @ 7.70 A - 150 W	
	19.5 V dc @ 10.3 A - 200 W	
Temperature		
Operating	**5°C to 35°C**	41°F to 95°F
Nonoperating	**-20°C to 60°C**	-4°F to 140°F
Relative humidity (noncondensing)		
Operating	10% to 90%	
Nonoperating	5% to 95%	
Maximum altitude (unpressurized)		
Operating	**-15 m to 3,048 m**	-50 ft to 10,000 ft
Nonoperating	**-15 m to 12,192 m**	-50 ft to 40,000 ft

Table 10-1 Computer specifications (continued)

	Metric	U.S.
NOTE: Applicable product safety standards specify thermal limits for plastic surfaces. The device operates well within this range of temperatures.		

35.6 cm (14.0 in) display specifications

This section provides specifications for your display.

Table 10-2 Display specifications

	Metric	U.S.
Active diagonal size	35.6 cm	14.0 in
Resolution	1920 × 1200	
Surface treatment	Antiglare	
Brightness	1000 nits 400 nits 250 nits	
Viewing angle	UWVA	
Backlight	WLED + LBL	
Display panel interface	eDP 1.2 with PSR	

Solid-state drive specifications

This section provides specifications for your solid-state drives.

Table 10-3 Solid-state drive specifications

	256 GB*	512 GB*	1 TB*
Dimensions			
Height	1.0 mm	1.0 mm	1.0 mm
Length	50.8 mm	50.8 mm	50.8 mm
Width	28.9 mm	28.9 mm	28.9 mm
Weight	< 10 g	< 10 g	< 10 g
Interface type	PCIe	PCIe	PCIe
Ready time, maximum (to not busy)	1.0 ms	< 1.0 ms	1.0 ms
Access times, logical	0.1 ms	0.1 ms	0.1 ms
Transfer rate			
Sequential read	up to 2150 MB/s	up to 2150 MB/s	up to 2150 MB/s
Random read	Up to 300,000 IOPs	Up to 300,000 IOPs	Up to 300,000 IOPs
Sequential write	up to 1550 MB/s	up to 1550 MB/s	up to 1550 MB/s

Table 10-3 **Solid-state drive specifications (continued)**

	256 GB*	512 GB*	1 TB*
Random write	Up to 100,000 IOPs	Up to 100,000 IOPs	Up to 100,000 IOPs
Total logical sectors	468,883,296	1,000,215,216	1,500,336,388
Operating temperature	**0°C to 70°C** (32°F to 158°F)		

*1 GB = 1 billion bytes when referring to hard drive storage capacity. Actual accessible capacity is less. Actual drive specifications may differ slightly.

NOTE: Certain restrictions and exclusions apply. Contact support for details.

Solid-state drive specifications (SATA-3)

This section provides specifications for your solid-state drive.

Table 10-4 **Solid-state drive specifications**

	128 GB*
Dimensions	
Height	1.35 mm
Weight	< 10 g
Interface type	SATA-3
Ready time, maximum (to not busy)	1.0 ms
Access times, logical	0.1 ms
Transfer rate	up to 540 MB/s
Total logical sectors	234,441,648
Operating temperature	**0°C to 70°C** (32°F to 158°F)

*1 GB = 1 billion bytes when referring to hard drive storage capacity. Actual accessible capacity is less. Actual drive specifications can differ slightly.

NOTE: Certain restrictions and exclusions apply. Contact support for details.

11 Statement of memory volatility

For general information regarding nonvolatile memory in HP business computers, and to restore nonvolatile memory that can contain personal data after the system has been turned off and the hard drive has been removed, use these instructions.

HP business computer products that use Intel®-based or AMD®-based system boards contain volatile DDR memory. The amount of nonvolatile memory present in the system depends upon the system configuration. Intel-based and AMD-based system boards contain nonvolatile memory subcomponents as originally shipped from HP, with the following assumptions:

- No subsequent modifications were made to the system.
- No applications, features, or functionality were added to or installed on the system.

Following system shutdown and removal of all power sources from an HP business computer system, personal data can remain on volatile system memory (DIMMs) for a finite period of time and also remains in nonvolatile memory. Use the following steps to remove personal data from the computer, including the nonvolatile memory found in Intel-based and AMD-based system boards.

NOTE: If your tablet has a keyboard base, connect to the keyboard base before beginning steps in this chapter.

Current BIOS steps

Use these instructions to restore nonvolatile memory.

1. Follow these steps to restore the nonvolatile memory that can contain personal data. Restoring or reprogramming nonvolatile memory that does not store personal data is neither necessary nor recommended.

   a. Turn on or restart the computer, and then quickly press esc.

   NOTE: If the system has a BIOS administrator password, enter the password at the prompt.

   b. Select **Main**, select **Apply Factory Defaults and Exit**, and then select **Yes** to load defaults. The computer restarts.

   c. During the restart, press esc while the "Press the ESC key for Startup Menu" message is displayed at the bottom of the screen.

   NOTE: If the system has a BIOS administrator password, enter the password at the prompt.

d. Select the **Security** menu, select **Restore Security Settings to Factory Defaults**, and then select **Yes** to restore security level defaults. The computer reboots.

e. During the reboot, press esc while the "Press the ESC key for Startup Menu" message is displayed at the bottom of the screen.

NOTE: If the system has a BIOS administrator password, enter the password at the prompt.

f. If an asset or ownership tag is set, select the **Security** menu and scroll down to the **Utilities** menu. Select **System IDs**, and then select **Asset Tracking Number**. Clear the tag, and then make the selection to return to the prior menu.

g. If a DriveLock password is set, select the **Security** menu, and scroll down to **Hard Drive Utilities** under the **Utilities** menu. Select **Hard Drive Utilities**, select **DriveLock**, and then clear the check box for **DriveLock password on restart**. Select **OK** to proceed.

h. Select the **Main** menu, and then select **Reset BIOS Security to factory default**. Select **Yes** at the warning message. The computer reboots.

i. During the reboot, press esc while the "Press the ESC key for Startup Menu" message is displayed at the bottom of the screen.

NOTE: If the system has a BIOS administrator password, enter the password at the prompt.

j. Select the **Main** menu, select **Apply Factory Defaults and Exit**, select **Yes** to save changes and exit, and then select **Shutdown**.

k. Reboot the system. If the system has a Trusted Platform Module (TPM), fingerprint reader, or both, one or two prompts will appear—one to clear the TPM and the other to Reset Fingerprint Sensor. Press or tap f1 to accept or f2 to reject.

l. Remove all power and system batteries for at least 24 hours.

2. Complete one of the following:

- Remove and retain the storage drive.

  – or –

- Clear the drive contents by using a third-party utility designed to erase data from an SSD.

  – or –

- Clear the contents of the drive by using the following BIOS Setup Secure Erase command option steps:

NOTE: If you clear data using Secure Erase, you cannot recover it.

a. Turn on or restart the computer, and then quickly press esc.

b. Select the **Security** menu and scroll down to the esc menu.

c. Select **Hard Drive Utilities**.

d. Under **Utilities**, select **Secure Erase**, select the hard drive storing the data you want to clear, and then follow the on-screen instructions to continue.

   – or –

Clear the contents of the drive using the following Disk Sanitizer commands steps:

i. Turn on or restart the computer, and then quickly press esc.

ii. Select the **Security** menu and scroll down to the **Utilities** menu.

iii. Select **Hard Drive Utilities**.

iv. Under **Utilities**, select **Disk Sanitizer**, select the hard drive with the data that you want to clear, and then follow the on-screen instructions to continue.

NOTE: The amount of time it takes for Disk Sanitizer to run can take several hours. Plug the computer into an AC outlet before starting.

Nonvolatile memory usage

Use this table to troubleshooting nonvolatile memory usage.

Table 11-1 **Troubleshooting steps for nonvolatile memory usage**

Nonvolatile memory type	Amount (Size)	Does this memory store customer data?	Does this memory retain data when power is removed?	What is the purpose of this memory?	How is data entered into this memory?	How is this memory write-protected?
HP Sure Start flash (select models only)	8 MB	No	Yes	Provides protected backup of critical System BIOS code, EC firmware, and critical computer configuration data for select platforms that support HP Sure Start. For more information, see Using HP Sure Start (select models only)HP Sure Start on page 114.	Data cannot be written to this device via the host processor. The content is managed solely by the HP Sure Start Embedded Controller.	This memory is protected by the HP Sure Start Embedded Controller.
Real Time Clock (RTC) battery backed-up CMOS configuration memory	256 bytes	No	Yes	Stores system date and time and noncritical data.	RTC battery backed-up CMOS is programmed using Computer Setup (BIOS), or by changing the Windows date & time.	This memory is not write-protected.

Table 11-1 Troubleshooting steps for nonvolatile memory usage (continued)

Nonvolatile memory type	Amount (Size)	Does this memory store customer data?	Does this memory retain data when power is removed?	What is the purpose of this memory?	How is data entered into this memory?	How is this memory write-protected?
Controller (NIC) EEPROM	64 KB (not customer accessible)	No	Yes	Stores NIC configuration and NIC firmware.	NIC EEPROM is programmed using a utility from the NIC vendor that can be run from DOS.	A utility must be used to write data to this memory and is available from the NIC vendor. Writing data to this ROM in an inappropriate manner will render the NIC nonfunctional.
DIMM Serial Presence Detect (SPD) configuration data	256 bytes per memory module, 128 bytes programmable (not customer accessible)	No	Yes	Stores memory module information.	DIMM SPD is programmed by the memory vendor.	Data cannot be written to this memory when the module is installed in a computer. The specific write-protection method varies by memory vendor.
System BIOS	9 MB	Yes	Yes	Stores system BIOS code and computer configuration data.	System BIOS code is programmed at the factory. Code is updated when the system BIOS is updated. Configuration data and settings are entered using the Computer Setup (BIOS) or a custom utility.	NOTE: Writing data to this ROM in an inappropriate manner can render the computer nonfunctional. A utility must be used for writing data to this memory and is available on the HP website; go to http://www.hp.com/support. Select **Find your product**, and then follow the on-screen instructions.
Intel Management Engine Firmware (present only in select Elite or Z models. For more information, go to http://www.hp.com/support. Select **Identify your product for manuals and specific product information**, and then follow the on-screen instructions.)	1.5 MB or 7 MB	Yes	Yes	Stores Management Engine Code, Settings, Provisioning Data and iAMT third-party data store.	Management Engine Code is programmed at the factory. Code is updated via Intel secure firmware update utility. Unique Provisioning Data can be entered at the factory or by an administrator using the Management Engine (MEBx) setup utility. The third-party data store contents can be populated by a remote management console or local applications that have been registered by an administrator to have access to the space.	The Intel chipset is configured to enforce hardware protection to block all direct read-write access to this area. An Intel utility must be used for updating the firmware. Only firmware updates digitally signed by Intel can be applied using this utility.

Table 11-1 Troubleshooting steps for nonvolatile memory usage (continued)

Nonvolatile memory type	Amount (Size)	Does this memory store customer data?	Does this memory retain data when power is removed?	What is the purpose of this memory?	How is data entered into this memory?	How is this memory write-protected?
Bluetooth flash (select products only)	2 megabits	No	Yes	Stores Bluetooth configuration and firmware.	Bluetooth flash is programmed at the factory. Tools for writing data to this memory are not publicly available but can be obtained from the silicon vendor.	A utility must be used for writing data to this memory and is made available through newer versions of the driver whenever the flash requires an upgrade.
802.11 WLAN EEPROM	4 kilobits to 8 kilobits	No	Yes	Stores configuration and calibration data.	802.11 WLAN EEPROM is programmed at the factory. Tools for writing data to this memory are not made public.	A utility must be used for writing data to this memory and is typically not made available to the public unless a firmware upgrade is necessary to address a unique issue.
Camera (select products only)	64 kilobits	No	Yes	Stores camera configuration and firmware.	Camera memory is programmed using a utility from the device manufacturer that can be run from Windows.	A utility must be used for writing data to this memory and is typically not made available to the public unless a firmware upgrade is necessary to address a unique issue.
Fingerprint reader (select products only)	512 KB flash	Yes	Yes	Stores fingerprint templates.	Fingerprint reader memory is programmed by user enrollment in HP ProtectTools Security Manager.	Only a digitally signed application can make the call to write to the flash.

Questions and answers

Use this section to answer your questions about nonvolatile memory.

1. **How can the BIOS settings be restored (returned to factory settings)?**

IMPORTANT: The restore defaults feature does not securely erase any information on your hard drive. See question and answer 6 for steps to securely erase information.

The restore defaults feature does not reset the Custom Secure Boot keys. See question and answer 7 for information about resetting the keys.

a. Turn on or restart the computer, and then quickly press esc.

b. Select **Main**, and then select **Apply Factory Defaults and Exit**.

c. Follow the on-screen instructions.

d. Select **Main**, select **Save Changes and Exit**, and then follow the on-screen instructions.

2. **What is a UEFI BIOS, and how is it different from a legacy BIOS?**

   The Unified Extensible Firmware Interface (UEFI) BIOS is an industry-standard software interface between the platform firmware and an operating system (OS). It replaces the older BIOS architecture but supports much of the legacy BIOS functionality.

   Like the legacy BIOS, the UEFI BIOS provides an interface to display the system information and configuration settings and to change the configuration of your computer before an OS is loaded. BIOS provides a secure runtime environment that supports a Graphic User Interface (GUI). In this environment, you can use either a pointing device (touch screen, touchpad, pointing stick, or USB mouse) or the keyboard to navigate and make menu and configuration selections. The UEFI BIOS also contains basic system diagnostics.

   The UEFI BIOS provides functionality beyond that of the legacy BIOS. In addition, the UEFI BIOS works to initialize the computer's hardware before loading and executing the OS; the runtime environment allows the loading and execution of software programs from storage devices to provide more functionality, such as advanced hardware diagnostics (with the ability to display more detailed system information) and advanced firmware management and recovery software.

   HP has provided options in Computer Setup (BIOS) to allow you to run in legacy BIOS, if required by the operating system. Examples of this requirement would be if you upgrade or downgrade the OS.

3. **Where is the UEFI BIOS located?**

   The UEFI BIOS is located on a flash memory chip. You must use a utility to write to the chip.

4. **What kind of configuration data is stored on the DIMM Serial Presence Detect (SPD) memory module? How would this data be written?**

   The DIMM SPD memory contains information about the memory module, such as size, serial number, data width, speed and timing, voltage, and thermal information. This information is written by the module manufacturer and stored on an EEPROM. You cannot write to this EEPROM when the memory module is installed in a computer. Third-party tools do exist that can write to the EEPROM when the memory module is not installed in a computer. Various third-party tools are available to read SPD memory.

5. **What is meant by "Restore the nonvolatile memory found in Intel-based system boards"?**

   This message relates to clearing the Real Time Clock (RTC) CMOS memory that contains computer configuration data.

6. **How can the BIOS security be reset to factory defaults and erase the data?**

   IMPORTANT: Resetting results in the loss of information.

   These steps do not reset Custom Secure Boot Keys. See question and answer 7 for information about resetting the keys.

   a. Turn on or restart the computer, and then quickly press esc.

   b. Select **Main**, and then select **Reset Security to Factory Defaults**.

   c. Follow the on-screen instructions.

   d. Select **Main**, select **Save Changes and Exit**, and then follow the on-screen instructions.

7. **How can the Custom Secure Boot Keys be reset?**

Secure Boot is a feature to ensure that only authenticated code can start on a platform. If you enabled Secure Boot and created Custom Secure Boot Keys, disabling Secure Boot does not clear the keys. You must also select to clear the Custom Secure Boot Keys. Use the same Secure Boot access procedure that you used to create the Custom Secure Boot Keys, but select to clear or delete all Secure Boot Keys.

a. Turn on or restart the computer, and then quickly press esc.

b. Select the **Security** menu, select **Secure Boot Configuration**, and then follow the on-screen instructions.

c. At the **Secure Boot Configuration** window, select **Secure Boot**, select **Clear Secure Boot Keys**, and then follow the on-screen instructions to continue.

Using HP Sure Start (select products only)

Select computer models are configured with HP Sure Start, a technology that continuously monitors your computer's BIOS for attacks or corruption.

If the BIOS becomes corrupted or is attacked, HP Sure Start restores the BIOS to its previously safe state, without user intervention. Those select computer models ship with HP Sure Start configured and enabled. HP Sure Start is configured and already enabled so that most users can use the HP Sure Start default configuration. Advanced users can customize the default configuration.

To access the latest documentation on HP Sure Start, go to http://www.hp.com/support.

12 Power cord set requirements

This chapter provides power cord requirements for countries and regions.

The wide-range input feature of the computer permits it to operate from any line voltage from 100 V ac to 120 V ac, or from 220 V ac to 240 V ac.

The three-conductor power cord set included with the computer meets the requirements for use in the country or region where the equipment is purchased.

Power cord sets for use in other countries or regions must meet the requirements of the country and region where the computer is used.

Requirements for all countries

These power cord requirements are applicable to all countries and regions.

- The length of the power cord set must be at least **1.0 m** (3.3 ft) and no more than **2.0 m** (6.5 ft).
- All power cord sets must be approved by an acceptable accredited agency responsible for evaluation in the country or region where the power cord set will be used.
- The power cord sets must have a minimum current capacity of 10 A and a nominal voltage rating of 125 V ac or 250 V ac, as required by the power system of each country or region.
- The appliance coupler must meet the mechanical configuration of an EN 60 320/IEC 320 Standard Sheet C13 connector for mating with the appliance inlet on the back of the computer.

Requirements for specific countries and regions

To determine power cord requirements for specific countries and regions, use this table.

Table 12-1 **Power cord requirements for specific countries and regions**

Country/region	Accredited agency	Applicable note number
Argentina	IRAM	1
Australia	SAA	1
Austria	OVE	1
Belgium	CEBEC	1
Brazil	ABNT	1
Canada	CSA	2

Table 12-1 Power cord requirements for specific countries and regions (continued)

Country/region	Accredited agency	Applicable note number
Chile	IMQ	1
Denmark	DEMKO	1
Finland	FIMKO	1
France	UTE	1
Germany	VDE	1
India	BIS	1
Israel	SII	1
Italy	IMQ	1
Japan	JIS	3
Netherlands	KEMA	1
New Zealand	SANZ	1
Norway	NEMKO	1
People's Republic of China	CCC	4
Saudi Arabia	SASO	7
Singapore	PSB	1
South Africa	SABS	1
South Korea	KTL	5
Sweden	SEMKO	1
Switzerland	SEV	1
Taiwan	BSMI	6
Thailand	TISI	1
United Kingdom	ASTA	1
United States	UL	2

Table 12-1 Power cord requirements for specific countries and regions (continued)

Country/region	Accredited agency	Applicable note number

1. The flexible cord must be Type HO5VV-F, three-conductor, 0.75 mm^2 conductor size. Power cord set fittings (appliance coupler and wall plug) must bear the certification mark of the agency responsible for evaluation in the country or region where it will be used.
2. The flexible cord must be Type SVT/SJT or equivalent, No. 18 AWG, three-conductor. The wall plug must be a two-pole grounding type with a NEMA 5-15P (15 A, 125 V ac) or NEMA 6-15P (15 A, 250 V ac) configuration. CSA or C-UL mark. UL file number must be on each element.
3. The appliance coupler, flexible cord, and wall plug must bear a T mark and registration number in accordance with the Japanese Dentori Law. The flexible cord must be Type VCTF, three-conductor, 0.75 mm^2 or 1.25 mm^2 conductor size. The wall plug must be a two-pole grounding type with a Japanese Industrial Standard C8303 (7 A, 125 V ac) configuration.
4. The flexible cord must be Type RVV, three-conductor, 0.75 mm^2 conductor size. Power cord set fittings (appliance coupler and wall plug) must bear the CCC certification mark.
5. The flexible cord must be Type H05VV-F three-conductor, 0.75 mm^2 conductor size. KTL logo and individual approval number must be on each element. Approval number and logo must be printed on a flag label.
6. The flexible cord must be Type HVCTF three-conductor, 1.25 mm^2 conductor size. Power cord set fittings (appliance coupler, cable, and wall plug) must bear the BSMI certification mark.
7. For 127 V ac, the flexible cord must be Type SVT or SJT 3-conductor, 18 AWG, with plug NEMA 5-15P (15 A, 125 V ac), with UL and CSA or C-UL marks. For 240 V ac, the flexible cord must be Type H05VV-F three-conductor, 0.75 mm^2 or 1.00 mm^2 conductor size, with plug BS 1363/A with BSI or ASTA marks.

13 Recycling

When a nonrechargeable or rechargeable battery has reached the end of its useful life, do not dispose of the battery in general household waste. Follow the local laws and regulations in your area for battery disposal.

HP encourages customers to recycle used electronic hardware, HP original print cartridges, and rechargeable batteries. For more information about recycling programs, see the HP website at http://www.hp.com/recycle.

Index

A

AC adapter
  spare part numbers 30
adapter
  spare part numbers 31
ambient light and color sensor, identifying 9
audio jack
  illustrated 25
  removal 57
  spare part number 25, 57
audio-out (headphone)/audio-in (microphone) combo jack, identifying 7
audio, product description 2

B

backpack, spare part numbers 31
backup, creating 96
backups 96
bag, spare part numbers 31
battery
  illustrated 26
  removal 47
  spare part numbers 26, 47
battery light 8
BIOS
  determining version 89, 93
  downloading an update 90, 91, 93, 94
  starting the Setup Utility 89
  updating 89, 93
boot order
  changing using the f9 prompt 94
boot order, changing 98
bottom cover
  illustrated 26
  removal 45
  spare part numbers 26, 45
Bracket Kit, spare part number 31
buttons
  left touchpad 11
  power 13, 15
  right touchpad 11

C

cable retainer
  removal 59
  spare part number 59
cable, spare part numbers 31
cables
  spare part numbers 29
camera 9
  identifying 9
camera light, identifying 9
camera privacy cover, identifying 9
caps lock light, identifying 12
card reader
  illustrated 23
  removal 86
  spare part number 23, 86
card reader cable
  illustrated 23, 29
  removal 85
  spare part number 23, 29, 85
caring for your computer 40
cautions
  electrostatic discharge 36, 37
chipset, product description 1
cleaning your computer 40
  caring for wood veneer 42
  disinfecting 41
  HP Easy Clean 40
  removing dirt and debris 40
components
  bottom 15
  display 8
  keyboard area 10
  left side 7
  rear 16
  right side 6
Computer Setup
  navigating and selecting 92
  restoring factory settings 93
  starting 92
computer specifications 105
connector board
  removal 59
  spare part number 59
connector board cable
  illustrated 25, 29
  removal 58
  spare part number 25, 29, 58
connector, power 8

D

display
  specifications 105, 106
display assembly
  removal 61
  subcomponents 26
display back cover
  illustrated 26
  spare part numbers 26
display bezel
  illustrated 26
  removal 63
  spare part numbers 26, 63
display components 8
display panel
  illustrated 26
  product description 1
  removal 64
  spare part numbers 26, 66
display panel cable
  illustrated 26
  removal 67
  spare part number 26, 67
display transfer board
  illustrated 26
  removal 69
  spare part numbers 26, 70

display transfer board cable
illustrated 26
removal 68
spare part number 26, 68
dock audio module, spare part number 32
dock, spare part numbers 32
duck head adapter, spare part numbers 32

E

electrostatic discharge (ESD) 36, 37
preventing damage 36-38
eMMC
product description 2
esc key, identifying 14

F

fan
illustrated 25
removal 60
spare part numbers 25, 60
fingerprint reader
illustrated 23
removal 78
spare part number 23
spare part numbers 78
fingerprint reader bracket
illustrated 23
removal 79
spare part number 23, 79
fingerprint reader cable
illustrated 23, 29
removal 80
spare part number 23, 29, 80
fingerprint reader, identifying 14
fn key, identifying 14
fn lock light, identifying 12

G

grounding methods 36-38
guidelines
packaging 36, 42
transporting 36, 42
workstation 36

H

hard drive
specifications 105
hardware, locating 6
HDMI port, identifying 7
heat sink
illustrated 25
removal 77
spare part numbers 25, 77
hinge
illustrated 26
removal 67
spare part number 26, 68
hinge cover
illustrated 26
removal 66
spare part number 26, 66
HP PC Hardware Diagnostics UEFI
downloading 102
failure ID code 102
starting 102
using 101
HP PC Hardware Diagnostics Windows
accessing 99, 100
downloading 100, 101
failure ID code 99
installing 101
using 99
HP Recovery media recovery 97
HP Sure Recover 98
HP Sure Start 108, 114
hub, spare part numbers 32

I

I/O bracket
illustrated 25
removal 59, 76
spare part number 25, 59, 76
illustrated parts catalog 18
internal microphones, identifying 9

J

jacks
audio-out (headphone)/audio-in (microphone) combo 7

K

keyboard
product description 3
keyboard with top cover
spare part numbers 87
keyboard, spare part number 32
keys
esc 14
fn 14
Windows 14

L

labels
contents 16
locations 16
left side components 7
lights
AC adapter and battery 8
battery 8
camera 9
caps lock 12
fn lock 12
microphone mute 12
num lk 12
power 12
privacy key 12
lights, mute 12
lights, num lk 12
low blue light mode 8

M

memory
nonvolatile 108
volatile 108
memory module
illustrated 25
product description 2
spare part numbers 25
memory module shield
illustrated 25
removal 53
spare part number 25, 53
memory modules
removal 53
spare part numbers 53
microphone
product description 2
microphone module
illustrated 26
removal 72
spare part number 26, 73
microphone module cable
illustrated 26
removal 71
spare part number 26, 72
microphone mute light, identifying 12
model name 1
mouse, spare part numbers 32
mute light, identifying 12

N

Near Field Communications (NFC)
  tapping area and antenna, identifying 11
NFC module
  illustrated 23
  removal 82
  spare part number 23, 82
NFC module cable
  illustrated 23, 29
  removal 81
  spare part number 23, 29, 81
nonvolatile memory 108
num lk light 12
num lk light, identifying 12

O

operating system, product description 5
optical drive, spare part number 32

P

packaging guidelines 36, 42
Plastics Kit, spare part number 32
pointing device, product description 3
ports
  HDMI 7
  product description 3
  USB SuperSpeed 7
  USB SuperSpeed 5 Gbps port with HP Sleep and Charge 8
  USB Type-C power connector and Thunderbolt port with HP Sleep and Charge 8
power button, identifying 13, 15
power connector
  identifying USB Type-C 8
power cord
  requirements for all countries 115
  requirements for specific countries and regions 115
  set requirements 115
  spare part numbers 32-34
power lights 12
power requirements, product description 4
privacy key light 12
processor
  product description 1
product description
  audio 2
  chipset 1
  display panel 1
  eMMC 2
  keyboard 3
  memory module 2
  microphone 2
  operating system 5
  pointing device 3
  ports 3
  power requirements 4
  processors 1
  product name 1
  security 4
  sensors 4
  serviceability 5
  storage 2
  video 2
  wireless 3
product name 1

R

recovery 96, 97
  discs 97
  media 97
  USB flash drive 97
recovery media 96
  creating using HP Cloud Recovery Download Tool 96
  creating using Windows tools 96
Remote HP PC Hardware Diagnostics UEFI settings
  customizing 104
  using 103
removal and replacement procedures 45
removing personal data from volatile system memory 108
restoring 96
restoring and recovery methods 97
right side components 6
RTC battery
  illustrated 23
  spare part number 23

S

Screw Kit, spare part number 35
security cable slot, identifying 7
security, product description 4
sensors, product description 4
serviceability, product description 5
setup utility
  navigating and selecting 92
  restoring factory settings 93
SIM card slot, identifying 6
slots
  security cable 7
  SIM card 6
  smart card 8
smart card slot, identifying 8
software, locating 6
solid-state drive
  illustrated 25
  removal 55
  spare part numbers 25, 28, 55
  specifications 106, 107
solid-state drive shield
  illustrated 25
  removal 56
  spare part number 25, 55, 56
spare part country codes 87
speaker
  removal 52
  spare part number 52
speakers
  illustrated 23
  spare part number 23
speakers, identifying 15
special keys, using 14
specifications
  computer 105
  display 105, 106
  hard drive 105
  solid-state drive 106, 107
static electricity 36, 37
storage
  product description 2
support information 43
Sure Start
  using 95
system board
  illustrated 23
  removal 73
  spare part numbers 23, 73
system memory, removing personal data from volatile 108
system restore 97
system restore point, creating 96

T

top cover/keyboard
illustrated 19-21
spare part numbers 19-21
touchpad
illustrated 23, 25
removal 84
settings 10
spare part numbers 23, 25, 84
touchpad buttons
identifying 11
touchpad cable
illustrated 23, 29
removal 83
spare part number 23, 29, 83
touchpad settings, adjusting 10
touchpad zone, identifying 11
TPM settings 95
transporting guidelines 36, 42

U

USB SuperSpeed 5 Gbps port, identifying 7
USB SuperSpeed port with HP Sleep and Charge, identifying 8
USB Type-C power connector and Thunderbolt port with HP Sleep and Charge, identifying 8

V

vents, identifying 16
video, product description 2

W

webcam module
illustrated 26
removal 71
spare part number 26
spare part numbers 71
webcam module cable
illustrated 26
removal 70
spare part number 26, 71
Windows
backup 96
recovery media 96
system restore point 96
Windows key, identifying 14
Windows tools, using 96
wireless antennas, identifying 9
wireless, product description 3
WLAN antenna
illustrated 26
spare part number 26
WLAN antennas, identifying 9
WLAN module
illustrated 25
removal 50
spare part numbers 25, 50
workstation guidelines 36
WWAN antenna
illustrated 26
spare part number 26
WWAN antennas, identifying 9
WWAN module
illustrated 25
removal 49
spare part numbers 25, 49